M. Tech (Control & Instrumentation)

Devender Kumar

2026

HYBRID SOC ESTIMATION AND SINGLE- INDUCTOR ACTIVE CELL BALANCING OF LITHIUM-ION BATTERY PACK

DISSERTATION/THESIS

SUBMITTED IN PARTIAL FULFILLMENT OF THE REQUIREMENTS FOR THE AWARD OF THE DEGREE
OF

MASTER OF TECHNOLOGY
IN

CONTROL & INSTRUMENTATION

Submitted by:

DEVENDER KUMAR

(2K24/C&I/12)

Under the Supervision of

PROF. MADHUSUDAN SINGH

DR. MAYANK KUMAR

(Professor, EED, DTU)

DEPARTMENT OF ELECTRICAL ENGINEERING

DELHI TECHNOLOGICAL UNIVERSITY

(Formerly Delhi College of Engineering)

Bawana Road, Delhi-110042

MAY, 2026

DEPARTMENT OF ELECTRICAL ENGINEERING
DELHI TECHNOLOGICAL UNIVERSITY

(Formerly Delhi College of Engineering)

Bawana Road, Delhi-110042

CANDIDATE'S DECLARATION

I, **Devender Kumar**, Roll No. 24/C&I/12 student of MTech (Control & Instrumentation), hereby declare that the project Dissertation titled **"Hybrid SOC Estimation and Single-Inductor Active Cell Balancing of Lithium-ion Battery Pack"** which is submitted by me to the Department of Electrical Engineering, Delhi Technological university, Delhi in partial fulfilment of the requirement for the award of the degree of Master of Technology, is original and not copied from any source without proper citation. This work has not previously formed the basis for the award of any Degree, Diploma Associateship, Fellowship, or other similar title or recognition.

Place: Delhi

(Devender Kumar)

M.Tech (Control & Instrumentation)

Roll No. 24/C&I/12

DEPARTMENT OF ELECTRICAL ENGINEERING

DELHI TECHNOLOGICAL UNIVERSITY

(Formerly Delhi College of Engineering)

Bawana Road, Delhi-110042

CERTIFICATE

I hereby certify that the project Dissertation titled **"SOC Estimation and Single- Inductor Active Cell Balancing of Lithium-ion Battery Pack"** which is Submitted by **Devender Kumar,** Roll No. **24/C&I/03**, Department of Electrical Engineering, Delhi Technological University, Delhi in partial fulfilment of the requirement for the award of the degree of Master of Technology, is a record of the project work carried out by the student under my supervision. To the best of my knowledge, this work has not been submitted in part or full for any Degree or Diploma to this University or elsewhere.

Place: Delhi

PROF. MADHUSUDAN SINGH/

DR. MAYANK KUMAR

Date:

(SUPERVISOR)

DEPARTMENT OF ELECTRICAL ENGINEERING DELHI TECHNOLOGICAL UNIVERSITY

(Formerly Delhi College of Engineering)

Bawana Road, Delhi-110042

ACKNOWLEDGEMENT

I would like to express my gratitude towards all the people who have contributed their precious time and effort to help me without whom it would not have been possible for me to understand and complete the project. I would like to thank **PROF. MADHUSHUDAN SINGH & Dr. MAYANK KUMAR, DTU Delhi, Department of Electrical Engineering**, my Project Supervisor, for supporting, motivating, and encouraging me throughout this work was carried out. His readiness for consultation at all times, his educative comments, and his concern and assistance even with practical things have been invaluable.

Besides my supervisor, I would like to thank all the Ph.D. scholars of EVRT LAB for helping me wherever required and providing me with continuous motivation during my research.

Finally, I must express my very profound gratitude to my parents, seniors, and my friends for providing me with unfailing support and continuous encouragement throughout the research work.

Date:

Devender kumar

M. Tech (Control & Instrumentation)

Roll No. 24/C&I/12

ABSTRACT

Lithium-ion batteries have been widely used in electric vehicles, renewable energy generation systems, and portable electronics because of their energy storage capability, long-term operation, and efficiency. However, there are several problems associated with the use of lithium-ion battery packs, such as SOC estimation error, cell imbalance, energy loss, and battery degradation due to an inaccurate charging/discharging process. Therefore, an effective BMS can provide improvement on battery performance and efficiency.

In this dissertation, an innovative SOC estimation method and an intelligent single-inductor active cell balancing scheme for lithium-ion battery packs will be designed using MATLAB/Simulink. The combination of Coulomb counting and the Kalman filter method can result in higher accuracy in estimating SOC and minimize SOC estimation error. Moreover, an adaptive PWM balancing control scheme will also be implemented to balance the difference in SOC among cells.

The active balancing control uses a single-inductor active balancing approach to transfer the energy from the cells with high SOC to those that have low SOC. Thus, it minimizes balancing energy loss compared to other passive balancing schemes.

The Battery Management System model as a whole is simulated using MATLAB/Simulink software for a battery pack containing four series-connected lithium-ion cells. Different simulation results, like SOC estimation output response, voltage balancing effect, balancing current, and varying PWM duty cycle, are presented with the objective of evaluating the performance of the system.

Based on the different results found through simulations, it could be inferred that a hybrid approach to estimate SOC would be more efficient. Additionally, an intelligent active balancing method reduces cell imbalance along with energy dissipation while balancing. This technique will improve the efficiency and performance of lithium-ion batteries.

TABLE OF CONTENTS

CANDIDATE DECLARATION	**i**
CERTIFICATE	**ii**
ACKNOWLEDGEMENT	**iii**
ABSTRACT	**iv**
TABLE OF CONTENTS	**v**
LIST OF FIGURES	**Viii**
LIST OF TABLES	**ix**
LIST OF ABBREVIATIONS	**x**
CHAPTER 1 INTRODUCTION	**1–11**
1.1 Overview	1
1.2 Need for Battery Management System (BMS)	3
1.3 Importance of State of Charge (SOC) Estimation	5
1.4 Need for Single-inductor Active Cell Balancing	7
1.5 Problem Statement	9
1.6 Objectives of the Proposed Work	10
CHAPTER 2 REVIEW OF LITERATURE	**12-17**
2.1 Introduction	12
2.2 Overview of Lithium-Ion Battery Technology	12
2.3 Review of State of Charge (SOC) Estimation Techniques	14
2.4 Review of Cell Balancing Techniques	15
2.5 Research Gap	16
2.6 Chapter Summary	17
CHAPTER 3 MODELING OF LITHIUM-ION BATTERY PACK	**18-40**
3.1 Introduction	18
3.2 Battery Structure and Working	19
3.3 Battery Equivalent Circuit Model	20
3.4 Battery Pack Configuration	22
3.5 Chapter Summarey	23
CHAPTER 4 HYBRID STATE OF CHARGE (SOC) ESTIMATION	**24-31**

4.1 Introduction 24
4.2 Coulomb Counting Method 24
4.3 Kalman Filter-Based SOC Estimation 26
4.4 Hybrid SOC Estimation Technique 27
4.5 SOC Estimation Error Analysis 29
4.6 Advantages of Hybrid SOC Estimation 30
4.7 Chapter Summary 31
CHAPTER 5 SINGLE-INDUCTOR ACTIVE CELL BALANCING 32-38
5.1 Introduction 32
5.2 Cell Balancing Techniques 32
5.2.1 Passive Cell Balancing 33
5.2.2 Active Cell Balancing 33
5.3 Single-Inductor Active Balancing Topology 34
5.4 Adaptive PWM Control 36
5.5 Advantages of Single Inductor Active Balancing 37
5.6 Discussion 38
CHAPTER 6 MATLAB/SIMULINK IMPLEMENTATION 39-48
6.1 Introduction 39
6.2 Overall MATLAB/SIMULINK Model of Proposed System 39
6.3 Battery Pack Subsystem 40
6.4 Hybrid SOC Estimation Subsystem 42
6.5 Single Inductor Active Balancing Subsystem 43
6.6 Adaptive PWM Control Implementation 45
6.7 Simulation Parameters 47
6.8 Working Operation of Proposed System 48
CHAPTER 7 RESULTS AND DISCUSSION 50-58
7.1 Introduction 50
7.2 Hybrid SOC Estimation Results 50
7.2.1 SOC Estimation During Changing Condition 51
7.2.2 SOC Estimation During Discharge Condition 51
7.3 Cell Balancing Performance During Charging Condition 53

7.3.1 SOC Variation Without Balancing During Charging Condition 53
7.3.1 SOC Variation With a Single Inductor Active Balancing During Charging Condition 54
7.4 Cell Balancing Performance During Discharging Condition 55
7.3.1 SOC Variation Without Balancing During Discharging Condition 55
7.3.1 SOC Variation With a Single Inductor Active Balancing During Charging Condition 56
7.5 Performance Evaluation And Discussion 58
CHAPTER 8 CONCLUSION AND SUGGESTIONS 59-60
8.1 Conclusion 59
8.2 Future Scope 59
REFERENCES 61-63

LIST OF FIGURES

Figure No.	Figure Name	Page No.
Figure 1.1	Applications of Lithium-Ion Battery	1
Figure 1.2	Basic Architecture of Battery Management System	4
Figure 1.3	Cell Balancing Process in Lithium-Ion Battery Pack	8
Figure 3.1	Structure and Working Principle of Li-Ion Battery	19
Figure 3.2	Second-order RC Equivalent Circuit Model of Li-Ion Battery	21
Figure 3.3	Series-connected Li-Ion Battery Pack	23
Figure 4.1	Coulomb Counting SOC Estimation Process	25
Figure 4.2	Kalman Filter-Based SOC Estimation Process	27
Figure 4.3	Hybrid SOC Estimation Process	28
Figure 5.1	Single-Inductor Active Balancing Topology	34
Figure 6.1	Overall MATLAB/Simulink Model	40
Figure 6.2	MATLAB/Simulink battery pack subsystem	41
Figure 6.3	Hybrid SOC Estimation Subsystem implemented in MATLAB/Simulink.	43
Figure 6.4	MATLAB/Simulink Intelligent Active Balancing Subsystem	45
Figure 6.5	MATLAB/Simulink Adaptive PWM Control Subsystem	46
Figure 6.6	Overall Working Process of Proposed System	49
Figure 7.1	Comparison of Actual SOC and Hybrid Estimated SOC During Charging Condition	51
Figure 7.2	Comparison of Actual SOC and Hybrid Estimated SOC During Discharging Condition	52
Figure 7.3	SOC Variation Without Balancing During Charging Condition	53
Figure 7.4	SOC Variation With Proposed Active Balancing During Charging Condition	54
Figure 7.5	SOC Variation Without Balancing During Discharging Condition	56
Figure 7.6	SOC Variation With Proposed Active Balancing During Discharging Condition	57

LIST OF TABLES

Table No.	Table Name	Page No.
Table 1.1	Comparison of Different Battery Technologies	2
Table 1.2	Comparison of Conventional and Intelligent Balancing	9
Table 1.3	Limitations of Existing Battery Management Techniques	10
Table 1.4	Comparison Between Existing and Proposed System	11
Table 2.1	Research Gap Analysis	16
Table 5.1	Comparison of Passive and Active Cell Balancing Techniques	57
Table 6.1	Simulation Parameters	47

LIST OF ABBREVIATION

Abbreviation	Full Form
BMS	Battery Management System
SOC	State of Charge
SOH	State of Health
EV	Electric Vehicle
Li-ion	Lithium-Ion
Li-Po	Lithium Polymer
Ni-Cd	Nickel-Cadmium
NiMH	Nickel-Metal Hydride
OCV	Open Circuit Voltage
ECM	Equivalent Circuit Model
PWM	Pulse Width Modulation
RC	Resistor-Capacitor
KF	Kalman Filter
CC	Coulomb Counting
MATLAB	Matrix Laboratory
CAN	Controller Area Network
IoT	Internet of Things
UPS	Uninterruptible Power Supply
DC	Direct Current
AC	Alternating Current
V	Voltage
A	Ampere
Ah	Ampere-hour
Wh	Watt-hour

Chapter 1

INTRODUCTION

1.1 OVERVIEW

High demand for effective energy storage systems has arisen due to the rapid growth in the number of EVs, renewable energy storage systems, portable electronic devices and smart grids. Compared to the different types of rechargeable batteries, lithium-ion batteries are one of the most efficient and long-lasting energy storage options, as they have a higher energy density, are lighter, are less subject to self-discharge, and are more efficient. This makes them ideal for use in electric vehicles, industries, aircrafts, and in the current portable electronics.[1] Lithium-ion batteries are typically comprised of numerous cells in series and/or parallel to obtain the required voltage and capacity.. Unfortunately, due to differences that occur in the manufacturing processes, variations in internal resistance, self-discharge properties, degradation through aging and operation environments, battery cells do not behave consistently when charging and discharging. This is what causes battery imbalances, lowers battery capacity, reduces efficiency, increases energy losses, and affects the longevity of the batteries.[2]

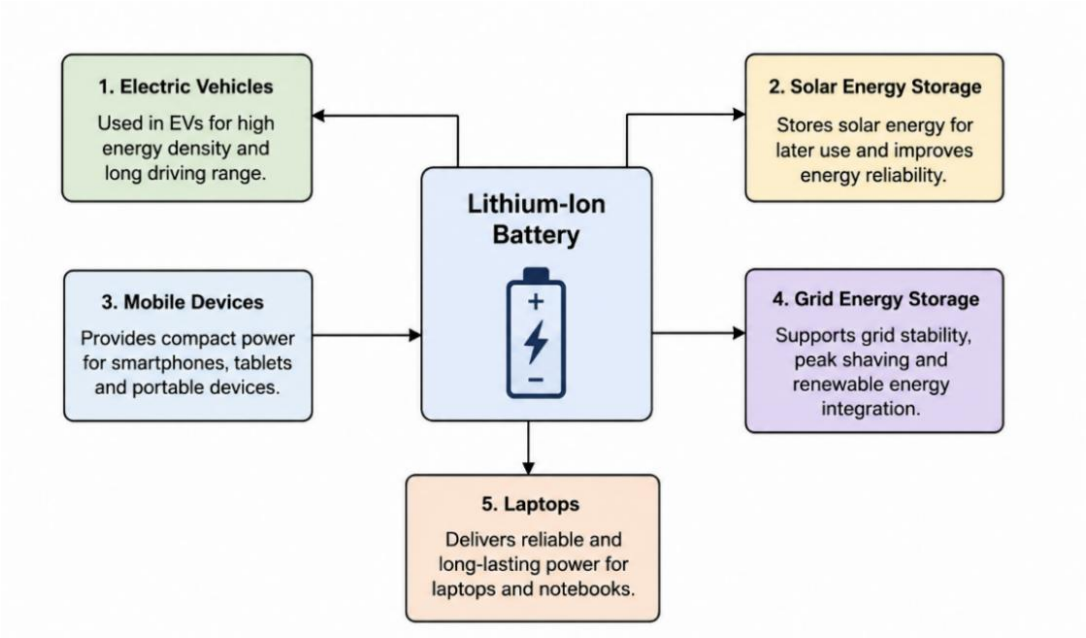

Figure 1.1: Applications of Lithium-ion Battery

To ensure safe, reliable and efficient operation, a Battery Pack (Lithium-ion battery pack) should include a Battery Management System (BMS). It is the task of the BMS to control and monitor various parameters of the battery, such as voltage, current, charge/discharge state, and State of Charge (SOC), in order to ensure smooth and effective performance of the battery system. Moreover, the BMS performs the crucial task of balancing the batteries, in which the state of charge among the battery cells is kept uniform for optimising the performance of the battery. [1][2]

The SOC estimation is an important task performed by the BMS due to the significance that it holds for efficient energy management, charging, protection of batteries, and balancing operation. The main problem in estimating the State of Charge is that the behaviour of the lithium-ion batteries with regard to SOC is highly non-linear and depends on various factors such as temperature and discharge rates. The conventional methods of SOC estimation include simple but commonly used methods like Coulomb Counting, which have estimation errors and hence limited accuracy.[3]

Table 1.1 Comparison of Different Battery Technologies

Battery Type	Energy Density	Cycle Life	Charging Time	Efficiency	Applications
Lead-Acid	Low	Low	Moderate	Moderate	UPS, backup systems
Nickel-Cadmium (Ni-Cd)	Moderate	Moderate	Moderate	Moderate	Industrial tools
Nickel-Metal Hydride (NiMH)	Moderate	High	Moderate	Good	Hybrid vehicles
Lithium-Ion (Li-ion)	High	High	Fast	High	EVs, portable electronics
Lithium-Polymer (Li-Po)	Very High	High	Fast	High	Drones, mobile devices

Based on Table 1.1, it is evident that lithium-ion batteries have high energy density, greater

efficiency, fast charging speed, and a long cycle life when compared to regular battery systems. Lithium-ion batteries are favoured for use in electric cars due to their numerous advantages

A further difficulty associated with the lithium-ion battery system is that of cell balancing. In passive cell balancing methods used traditionally, excess energy from high-energy cells is released into the environment as heat using balancing resistors; thus, the efficiency of balancing is low, and the loss of energy is increased. Active cell balancing techniques overcome the drawbacks of the aforementioned method by making use of energy-storing elements, such as capacitors, transformers, or inductors, for energy transfer from high-energy cells to low-energy cells. [4]

In the present dissertation work, the design of a hybrid SOC estimation and intelligent single-inductor active balancing system for lithium-ion batteries using MATLAB/Simulink is presented. A combination of Coulomb Counting and Kalman Filtering algorithms has been used for enhancing the performance of SOC estimation during dynamic charging and discharging. Moreover, an adaptive PWM-based balancing controller has been designed for balancing control based on the SOC mismatch in cells.

In the adopted balancing method, energy is effectively transferred from high SOC cells to low SOC cells by employing one inductor. The intelligent balancing controller ensures switchings and reduces the loss of energy, enhances balancing efficiency, and improves battery utilization. The complete BMS is modelled by using the MATLAB-Simulink tool for a series lithium-ion battery pack of four series cells.[5]

Simulation results show that the proposed SOC estimation is more efficient compared to the traditional SOC estimation method, whereas the intelligent active balancing method helps minimize cell imbalance and balancing energy loss

1.2 NEED FOR BATTERY MANAGEMENT SYSTEM (BMS)

The effectiveness of lithium-ion batteries relies heavily on the operating parameters, including over-charging, over-discharging, over-currents, and cell imbalances. When it comes to the use of lithium-ion batteries in electric vehicles or energy storage purposes, a number of batteries are interconnected in a series and/or parallel fashion to offer necessary voltages and power outputs. However, since each battery is produced through different

manufacturing processes, the resistance level, self-discharge, and deterioration processes will not be similar. Thus, the cells in a battery pack will exhibit inconsistency when it comes to charging and discharging cycles.[1] [5]

Such inconsistencies cause cell imbalances in voltage and State of Charge (SOC). A Battery Management System (BMS) is defined as a control system that ensures the effective operation of lithium-ion batteries.

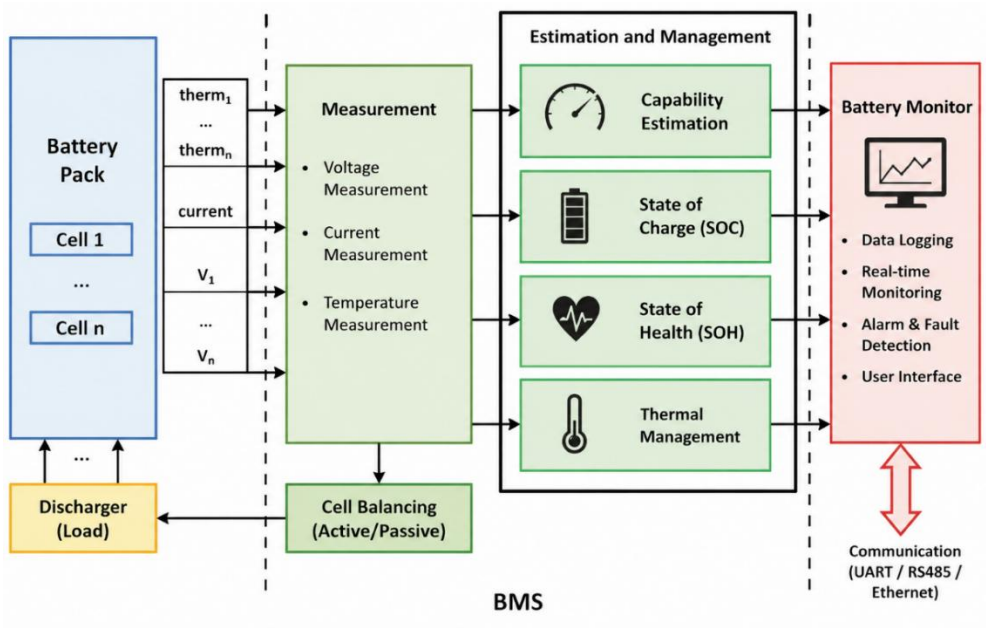

Figure 1.2: Basic Architecture of Battery Management System

SOC estimation is one of the key features of BMS. Since SOC is not directly measurable in lithium-ion batteries, algorithms of SOC estimation should be used to determine the remaining charge of a battery. The purposes of SOC estimation include efficient energy management, charging and discharging control, preventing overcharge and deep discharge and performing balancing operations [6]. Classical methods of SOC estimation, such as Coulomb Counting, have very simple algorithms, but their errors occur due to accumulations during estimation procedures. Thus, advanced estimation algorithms are employed nowadays; for example, such algorithms include the Kalman Filter Approach [7].

Battery balancing is another crucial task performed by BMS. Due to charging and discharging procedures, the SOC and voltage differences become greater among individual cells. If a battery is not properly balanced, some cells will get into an overcharged or deep

discharge state quicker than other cells, causing poor efficiency of the battery and a shorter lifetime of the battery. In the passive balancing procedure, the excess energy is dissipated from the battery in the form of heating through resistors. Thus, energy loss occurs while balancing the battery. In contrast, active balancing includes energy transfer from the battery cells with higher energy to lower energy cells [7].

Besides, the BMS increases reliability and efficiency of operations by constraining the charging and discharging within the parameters of safety. Improved battery management brings about high efficiency of the battery, high charge efficiency, reduced balancing losses, and improved performances of the EVs or power applications.

In this thesis, an intelligent single-inductor active balancing battery management system for a lithium-ion battery pack is developed using a hybrid SOC estimation technique in MATLAB/Simulink. This is aimed at enhancing the accuracy of SOC estimation, reducing SOC imbalance among the batteries, minimizing balancing losses, and maximizing battery efficiency

1.3 IMPORTANCE OF STATE OF CHARGE (SOC) ESTIMATION

State of Charge (SOC) is one of the most important variables in BMS. SOC is defined as the amount of charge available from a battery relative to its fully charged state. The relevance of estimating SOC is explained by the necessity to effectively monitor batteries with regard to their charge, discharge, energy, and safety issues in lithium-ion battery systems. Hence, an adequate estimation of SOC may contribute to efficient operation and ensure battery safety by avoiding overcharge or deep discharge.[7]

The State of Charge of a lithium-ion battery is unattainable by means of battery terminals since the nonlinearity of the electrochemical properties of a battery under different conditions requires estimation of SOC based on specific algorithms that define SOC as the amount of charge available on the basis of certain variables like battery voltage and currents.[8]

An elementary SOC estimation algorithm is referred to as Coulomb counting. This algorithm uses integration of battery currents to estimate SOC. While being a widely applied algorithm because of its simplicity, the Coulomb counting method faces challenges due to errors in the measurements of sensor currents and initial condition problems.[1] The SOC estimation

using Coulomb Counting is mathematically represented as:

$$SOC(t) = SOC(t-1) - \frac{I(t)\Delta t}{C_n} \quad [1.1]$$

Where,

- SOC (t) = Present State of Charge
- $SOC(t-1)$ = Previous State of Charge
- $I(t)$ = battery current
- Δt = sampling interval
- C_n = battery capacity

Coulomb Counting is an easy technique that requires less computation, but the accuracy in estimation reduces gradually owing to measurement errors.

It should be noted that model-based estimation algorithms, such as Kalman Filter Estimation, are very popular in today's Battery Management Systems since they allow attaining extremely high accuracy of SOC estimation through elimination of the estimation uncertainty by minimizing the estimation error through real-time SOC adjustment based on measured battery parameters [9].

$$\hat{x}_k = A\,\hat{x}_{k-1} + B\,u_k + K(y_k - C\,\hat{x}_k) \quad [1.2]$$

where:

- $\hat{x}_k$ = estimated system state
- A = state transition matrix
- B = input matrix
- u_k = control input
- K = Kalman gain
- y_k = measured output

- C = output matrix

The Kalman Filter continuously adjusts for error in estimation using measured values of the battery, which makes SOC estimation more accurate.

The SOC estimation error can be represented as:

$$SOC_{error} = SOC_{actual} - SOC_{estimated} \quad [1.3]$$

Where:

- SOC_{error} = SOC estimated error
- SOC_{actual} = Actual battery SOC
- $SOC_{estimated}$ = Estimated SOC obtained from the estimation algorithm

Lower SOC estimation error indicates better estimation accuracy and improved reliability of the Battery Management System.

Another factor that emphasizes the importance of accurate SOC estimation is that it ensures an optimal cell balancing process within a multi-cell Lithium-ion battery pack. During the charging and discharging processes, certain battery cells may operate at uneven levels of SOC because of their internal resistance, battery degradation, or manufacturing variations. The consequence of an increased disparity of SOC between cells is that weak cells will be overcharged and/or deeply discharged even before other cells, which adversely affects the battery life. Hence, SOC balancing outperforms voltage balancing in terms of performance.[10][11]

The approach to SOC estimation, presented in this thesis, relies on the use of the Coulomb counting algorithm combined with the Kalman Filter estimation algorithm in order to maximize the accuracy of SOC estimation. The estimated value of SOC will then serve as the basis for the active balancing process in the BMS.

1.4 Need for Intelligent Cell Balancing

For lithium-ion battery packs, there are numerous cells that are connected together either in series or in parallel form, which help achieve the required voltages and capacity for the

battery pack based on its usage, whether in an electric vehicle or energy storage system. Nevertheless, since each of the cells may differ from one another in terms of its voltage due to tolerances, different internal resistances, self-discharge rate, and other factors, including ageing effect, all cells will have varied State of Charge [1].

While battery pack is being operated in a charging process, it leads to the condition where the full charge of some cells occurs before others. This same phenomenon can occur while the battery is being discharged, whereby some weak cells tend to achieve the cutoff voltage level at an earlier time compared to the stronger ones. It will result in the situation where the weakest cells will determine the performance of the battery pack [11].

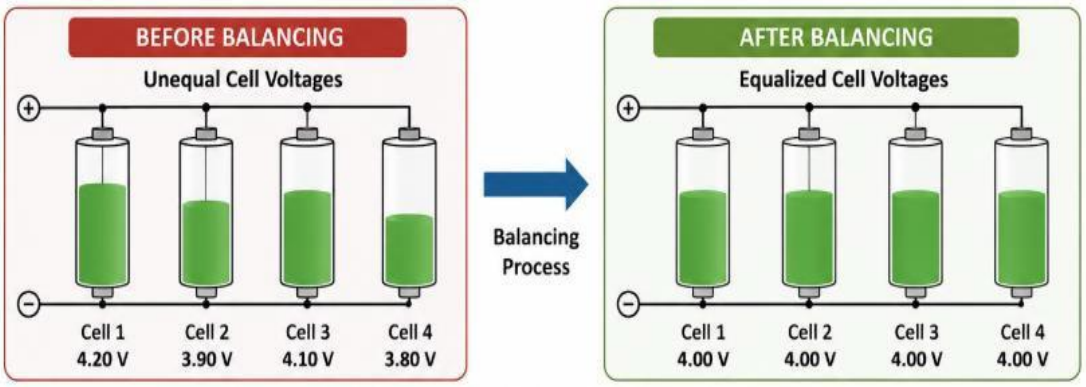

Figure 1.3: Cell Balancing Process in Lithium-Ion Battery Pack

Conventional means passive balancing consists of discharging the excess charge present in high-energy cells in the form of heat through a balancing resistor. Although passive balancing is simple and affordable method, it is inefficient, with significant energy losses, and also requires relatively longer balancing times compared to active balancing. Active balancing is also inefficient in the balancing of large electric vehicle batteries since a lot of energy is wasted during balancing [12]. In active balancing, energy transfer is carried out from high State-of-Charge (SOC) cells to low SOC cells through energy storage components such as inductors, capacitors, and transformers. Compared to passive balancing, active balancing is efficient and entails minimal energy losses, less balancing time, improved battery usage, and overall better performance. There exist various kinds of active balancing, with examples being Single Inductor Active Balancing, which is simpler and controlled energy transfer [4][13].

Table 1.2 Comparison of Conventional and Intelligent Balancing

onventional Balancing	Proposed Adaptive Active Balancing
Fixed PWM	Adaptive PWM
Energy Dissipation	Energy Transfer
Passive resistor	Single Inductor
High switching loss	Reduced switching loss
Low efficiency	High efficiency
No intelligent control	Intelligent SOC-based switching

In the modern Battery Management System, intelligent balancing control techniques have been integrated to dynamically control switching operations depending on the SOC mismatch between different cells. Intelligent balancing control improves the efficiency of balancing, reducing energy losses due to unwanted switching actions. Moreover, adaptive PWM balancing control has also been employed to enhance balancing effectiveness.

1.5 Problem Statement

The battery packs, which are made from the Li-Ion batteries used in electric vehicles(EVs) and power sources, generally suffer from an imbalance of charging and discharging of cells due to variations in internal resistance, ageing, different manufacturing processes. The unbalanced discharge of cells leads to inefficiency, loss of energy, deterioration, and shortened life span of batteries. Generally, the BMSs used in the current applications use fixed threshold balance techniques that result in an inefficient balancing process and a waste of energy. Furthermore, the existing methods of state of charge estimation, including Coulomb counting, suffer from the accumulation of estimation error problems that prevent the estimation of the actual conditions of the battery.

Moreover, the current balancing devices do not offer a regulating mechanism for the balancing process using the difference in state of charge between battery cells. As result, this leads to switching operations without balancing, wastage of energy, and poor performance

of batteries. There is a requirement for designing an intelligent Battery management system.

Table 1.3: Limitations of Existing Battery Management Techniques

Existing Technique	Limitation
Coulomb Counting Method	Accumulation of estimation error over time
Passive Cell Balancing	High energy loss due to heat dissipation
Fixed Threshold Balancing	Poor adaptability under varying conditions
Conventional BMS	No intelligent decision-making capability
Voltage-Based Balancing	Inaccurate SOC mismatch detection

1.6 Objectives of the Proposed Work

The development of an intelligent Battery Management System (BMS) of Li-Ion battery pack in MATLAB/Simulink would be the main goal of this research paper. In this thesis, efforts would be made to enhance the accuracy of SOC estimation and balancing of the battery pack through an intelligent control mechanism. The specific objectives of the proposed work are as follows:

- To study the characteristics and behavior of Li-Ion battery systems.
- To develop a mathematical and MATLAB/Simulink model of a Li-Ion battery pack.
- To implement the SOC estimation using the Coulomb counting method.
- To improve the SOC estimation accuracy using Kalman filter-based correction techniques.
- To develop a hybrid SOC estimation approach for reducing estimation error.
- To design an intelligent adaptive cell balancing technique based on voltage and SOC mismatch.

- To reduce balancing energy loss and improve battery efficiency.
- To implement adaptive PWM-based balancing control for intelligent switching operation.
- To analyze the performance of proposed system under different charging and discharging condition using MATLAB/Simulink.
- To compare the Proposed intelligent balancing technique with conventional balancing methods.

Proposed work aims to enhance and improve balancing performance, battery safety, increase battery lifespan, and provide a reliable battery management solution for electric vehicle (EV) applications.

Table 1.4 Comparison Between Existing and Proposed System

Feature	**Existing System**	**Hybrid System**
SOC Estimation Technique	Conventional Coulomb Counting	Hybrid SOC Estimation
Balancing Topology	Conventional Resistor based	Active Single-Inductor
Energy Transfer	Dissipative	Non-dissipative
PWM Control	Fixed	Adaptive PWM Control
Switching Logic	Conventional	Intelligent Switching
Battery Efficiency	Moderate	Improved
Energy Loss	High	Reduced
System Reliability	Medium	High

From Table 1.4, it can be observed that the hybrid soc and single-inductor active balancing provides improved SOC estimation accuracy, reduced balancing loss, enhanced balancing efficiency, and better operational reliability compared to conventional battery management methods.

Chapter 2

REVIEW OF LITERATURE

2.1 INTRODUCTION

Lithium-Ion batteries have become popular in electric cars, renewable energy and portable electronics, as well as in industrial applications because of their high energy density, long battery life, low self-discharge properties and efficiency. But if a battery pack employs lithium-ion batteries, the performance capabilities of battery management systems and monitoring systems are essential. Consequently, the battery management system (BMS) has become critical in today's scenario for safe and reliable operation of batteries [1]. BMS's key functions include battery monitoring, estimation of battery state of charge, battery state of health calculation, cell balancing, fault detection and the prevention of abnormalities in the battery. Among these, the most critical operations carried out by BMS are the estimation of SOC and cell balancing [4].

Quite a number of studies have been conducted for estimating SOC using Coulomb Counting, Open-circuit voltage, Neural networks, and Kalman filter methods. Likewise, there have also been quite a few experiments in cell balancing techniques such as passive, capacitor balancing, transformer, and inductor-based active cell balancing. [13]

Despite the tremendous success observed in battery management system technology, there still remain a few problems such as inaccuracy in estimation, losses through balancing, heavy computation burden, and unbalance in the batteries. This explains why research into accurate SOC estimation and cell balancing for the Li-Ion battery is continuously carried out. The chapter provides a thorough review of all the literature available on three main areas including the Battery Management System, SOC estimation techniques, and cell balancing method. Among other things, the chapter outlines the shortcomings associated with the current approach and the research gap that led to design of the intelligent Battery Management System.

2.2 Overview of Lithium-Ion Battery Technology

The importance of BMSs (Battery Management Systems) can hardly be overstated since

they offer safety, reliability, and efficient work of Li-Ion batteries employed in electric cars, renewable energy sources, and portable devices [1]. BMS is engaged in monitoring battery indicators such as voltage, current, temperature, SOC (State of Charge) and providing protection from overcharging, overdischarging, overcurrent, and other malfunctions during the operation of batteries.[2]

Battery management was examined by Rahimi-Eichi et al. [1]. These scholars provided a comprehensive review of BMS (Battery Management System). The authors stressed the importance of Battery Management Systems for Smart Grids and Electric Vehicles. The authors specified SOC estimation, cell balancing, battery protection, and communications as the key responsibilities of BMSs. The authors pointed out that efficient monitoring played an important role in the enhancement of batteries' properties. A thorough analysis of major Battery Management Systems for electric cars was performed by Liu et al. [2]. The scientists discussed such components of battery management as battery modeling, SOC estimation, SOH (State of Health) prediction, thermal management, and balancing. The authors suggested that sophisticated estimation algorithms and better balancing techniques were needed to ensure effective functioning of batteries.

An innovative approach involving a BMS, wireless charging, and IoT was implemented by M. S., S. S. Sundar, K. Kumaran, and M. Thirumeni [15]. The authors provided evidence proving the requirement for an intelligent monitoring process and information about the functioning of BMS.The application of wireless battery management systems for EVs via Bluetooth connection was presented by Na et al. [16]. In this regard, the research revealed the potential of wireless technology for reducing the number of connections required to implement a BMS, thus allowing scalability of the system.

Bansal and N. PR [17] performed a study on the potential of the integration of wireless battery management systems in electric vehicles, indicating how the employment of wireless communication technology reduced weight and expanded installation options. A similar idea is presented in studies conducted by Rincon Vija et al [18][19]. Thus, recent years' studies indicate considerable progress in BMS systems, such as battery monitoring, communication, and protection. Nevertheless, there are still areas that require improvement in BMS technologies, including SOC estimation and battery balancing methods. That’s why

advanced BMS is necessary, which would be capable of using intelligent battery monitoring and balancing approaches.

2.3 Review of State of Charge (SOC) Estimation Techniques

The State of Charge (SOC) is considered among the crucial parameters for battery management systems since it gives information regarding the remaining charge in the battery compared to its nominal capacity [11]. An accurate estimation of SOC is required for battery monitoring, battery charging control, energy management systems, and safe battery management. However, SOC cannot be measured directly; hence several approaches have been proposed for estimating the SOC of lithium-ion batteries [20]. Coulomb Counting is one of the widely employed SOC estimation approaches. The approach determines SOC through the integration of battery current. Coulomb Counting is easy to implement and computationally cheap; however, its accuracy depends heavily on the initialization state of the battery charge and battery current measurement. The small errors in measurement are accumulated over time and lead to high error in estimation during long-term operation. [21]

Another estimation technique for SOC is the Open-Circuit Voltage (OCV). OCV estimation involves using the dependency between the open-circuit voltage of the battery and the state of charge [12]. Although this technique gives accurate results, it requires the battery to be at open circuit voltage for quite some time, thus making it unsuitable for real-time EVs application. Some of the approaches that can help overcome deficiencies of the existing methods of state-of-charge estimation techniques are estimation by Kalman Filter algorithms. This approach allows for both SOC estimation using the battery model and the correction of estimation errors according to measurements of battery voltage and current [22].

As was stated above in [12], SOC Estimation by non-linear Kalman filter algorithm taking into consideration the influence of cell balancing in Li-Ion batteries was studied. As the result of investigation, the efficiency of the proposed method compared to conventional SOC estimation techniques was confirmed; however, the SOC estimation by Kalman Filter algorithm requires an appropriate battery model and considerable computational capacity. Also, recently researchers have started considering hybrid SOC estimation methods. The

point is that this type of SOC estimation involves different estimation methods used together, thereby benefiting from advantages of each of them but avoiding their weaknesses. For example, the estimation accuracy can be increased by supplementing Coulomb Counting with Kalman Filter.

2.4 Review of Cell Balancing Techniques

Cell balancing is a vital function carried out by the Battery Management System (BMS) which helps in maintaining an even state of voltage distribution as well as State of Charge (SOC) across battery cells. Due to differences in their manufacture, internal resistance, and aging effects among others, lithium-ion battery cells can experience imbalance over time [23]. Cell imbalance can reduce battery utilization efficiency and affect its life span. Consequently, it is imperative to adopt efficient cell balancing techniques.[24]

Cell balancing techniques are broadly classified into passive balancing and active balancing techniques. In passive balancing techniques, excess energy generated in high SOC cells is consumed in the form of heat energy by balancing resistors. While passive balancing techniques are economical and relatively easy to implement, they are not efficient in balancing due to losses incurred during energy consumption [25]. In order to overcome the inefficiency and loss of energy experienced in passive balancing techniques, several active balancing techniques have been developed. These are techniques where energy from cells with a high SOC level is shifted to those with lower SOC levels with the aid of energy storage units such as capacitors, inductors, transformers, and DC-DC converters. [4] [26]

The paper [4] examined an active balancing circuit using only one inductor for balancing Li-Ion batteries. In this paper, the researchers have shown that the circuit with a single inductor is effective in transferring energy between battery cells with reduced complexity of balancing circuits and losses from balancing. The analysis of different topologies of active balancing circuits was carried out in the paper [5], where several balancing circuits along with cell modeling techniques were compared. It was concluded that the use of active balancing is more effective than passive balancing, since active balancing circuits ensure a higher efficiency and better use of energy stored in batteries.

Detailed literature review on lithium-ion battery balancing was provided in [26] and [27]. Several types of balancing such as passive balancing, capacitive balancing, transformer-based balancing, and inductor-based balancing were analyzed. As a result, it was found that

the implementation of active balancing is preferable for electric vehicles due to higher efficiency and minimal energy losses. As has been found out from the experiments carried out, the use of active balancing has various advantages than the use of passive balancing techniques. If we consider the possible topologies for active balancing, then it can be found out that the one involving the use of one inductor will be the right topology because it offers good results.

2.5 Research Gaps Analysis

After a thorough literature review, one can observe that there is already enough research done regarding BMS, state of charge estimation, and balancing of batteries. Several methods for state of charge estimation such as coulomb counting, open circuit voltage, and Kalman filter based methods have been proposed in order to improve the accuracy of estimation[27]. In addition to this, different balancing methods both passive and active have been developed in order to reduce imbalance among lithium ion batteries. However, there are numerous issues still left unresolved by current technologies when it comes to batteries.

Table 2.1: Research Gap Analysis

Major Contribution	Identified Limitation
Single-Inductor Active Balancing for Lithium-Ion Battery Packs	No Hybrid SOC Estimation integrated
Analysis of Active Cell Balancing Topologies	Focus mainly on balancing topology; SOC estimation not considered
Review of Cell Balancing Techniques	Review study only; no implementation of intelligent balancing
Adaptive Passive Cell Balancing	Energy loss still exists due to passive balancing approach
SOC and Remaining Charge Estimation for Cell Balancing	No active balancing topology implemented
Coupled Inductor Design for Active Balancing	Focus on energy transfer efficiency; SOC estimation not addressed

The majority of the researchers are focused on state of charge estimation while excluding any efficient technique for battery balancing. Although Kalman filter based methods improve accuracy, they require accurate models along with being computationally intensive. On the other hand, the traditional method of coulomb counting suffers from drift problem after some time period.[28]

In addition, there have been other balancing studies that focused on enhancing the efficiency of energy transfer in the balancing process by the use of active balancing circuits. But most balancing systems do not incorporate SOC estimation as well as intelligent control strategies to achieve adaptive balancing. Moreover, passive balancing schemes are still characterized by energy losses and inefficient balancing operations. [29]

2.6 Chapter Summary

A literature review has been performed for Battery Management System (BMS), state of charge estimation, and cell balancing technique applied to lithium-ion batteries in this chapter. All the techniques related to BMS, state-of-charge estimation, and active and passive cell balancing have been explored in depth.

The conclusions from the literature review reveal that despite the development of new technology and better techniques used in the battery management system, further improvement is required especially in the aspect of state of charge estimation and cell balancing techniques. This review has also brought up that the existing literature lacks relevant information about the use of hybrid state of charge estimation and intelligent active cell balancing techniques in the BMS.

With the help of the above findings, this paper will design an intelligent BMS incorporating hybrid state of charge estimation based on coulomb counting and Kalman filter with single inductor active cell balancing via adaptive PWM.

CHAPTER 3
MODELING OF LITHIUM-ION BATTERY PACK

3.1 INTRODUCTION

With more demand for new energy storage technologies that are more effective and efficient, numerous projects have been undertaken to study lithium-ion batteries for technology implementation in electric vehicles, renewable resources, portable devices, aerospace applications and the smart grid [1]. The reasons for the popularity of lithium-ion batteries are their energy density, lightweight, low self-discharge rate, good cycle life and charge rate. The above features make lithium-ion batteries extremely useful in the present-day challenges [2]. The performance and efficiency of a lithium-ion battery system highly rely on the lithium battery system model. While implementing Li-Ion batteries into practical applications, one should keep in mind that different Li-Ion batteries are used in the form of series and parallel connections in order to get the required voltage and power output [3]. This connection of batteries results in the lithium-ion batteries being imbalanced in terms of SOC and voltage [30].

Modeling of batteries is an important concept in the process of developing and implementing BMS. Proper battery model plays an important role in the proper estimation and determination of battery parameters such as current, voltage dynamics, state of charge, and charging/discharge dynamics. Equally, battery models are essential in SOC estimation, smart balancing, performance analysis, and simulation of Li-Ion battery through MATLAB/Simulink platform.

There exist different approaches, including electro-chemical battery model, mathematical model, empirical models, and equivalent circuits models in Li-Ion battery modeling approaches. Out of all the battery modeling methods, equivalent circuits models are preferred in Li-Ion batteries due to their accuracy and efficiency. Equivalent circuits models are more suitable for implementation and application in battery management systems. For example, Li-Ion battery pack model is constructed in MATLAB/Simulink platform in this dissertation work. The objective of constructing a battery model in this case is to perform

battery performance analysis including SOC estimation, voltage dynamics, charging/discharge dynamics, and balancing of battery cells. Thus, the battery modeling method employed in this case is quite effective in analyzing the performance of the BMS system.

3.2 BATTERY STRUCTURE AND WORKING

A Li-Ion battery refers to an electrochemical device, which means that the energy storage in this kind of battery is in chemical energy, which is then converted to electricity through reversible electrochemical reactions. The lithium-ion batteries are highly applied in electric cars, renewable sources of energy, electronic gadgets, and industries because of its high energy density, light weight, longevity, and efficiency [31].

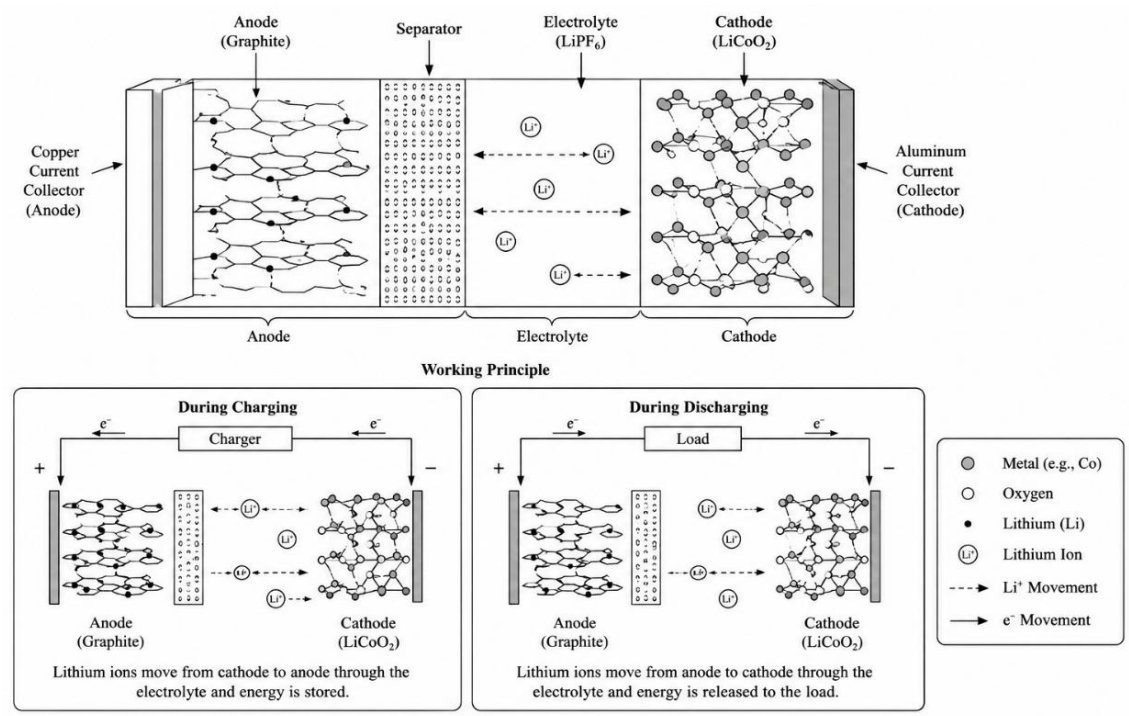

Figure 3.1: Structure and Working Principle of Li-Ion Battery

Figure 3.1 illustrates the structure and working principle of a lithium-ion battery during charging and discharging operations. A typical lithium-ion battery mainly consists of four important components:

- Anode
- Cathode

- Electrolyte
- Separator

The anode refers to the negative electrode, and in the case of lithium-ion batteries, the anode contains graphite materials. On the other hand, the cathode means the positive electrode, and it is made up of lithium metal oxides. Electrolytes serve as the means of transporting ions from the cathode to the anode and back. Lastly, the separator is used to avoid direct contact between the two electrodes and prevent the occurrence of a short circuit [31].

As far as the charging process is concerned, ions transfer from cathode to anode, hence storing energy in the form of chemical energy in the battery. However, in the discharge process, ions transfer from anode to cathode via electrolyte to supply stored chemical energy in the form of electricity. Transfer of electrons through the circuit produces electricity[32].

Practically speaking, the use of more than one lithium ion cell through series and parallel connections can help one make a battery pack capable of delivering increased voltage and increased energy storage capacity. However, since there could be variations caused by manufacturing tolerances, resistance differences, and others, each cell can have its own charging and discharging characteristics. This can lead to problems such as voltage imbalance, inefficient performance, decreased capacity, and shortened life cycle of the batteries. Therefore, battery management systems and balancing techniques need to be put into practice [33].

3.3 Battery Equivalent Circuit Model

Equivalent Circuit Modeling (ECM) represents the approaches used for Li-Ion battery system modeling in the BMS modeling process. This approach involves modeling of a Li-Ion battery using various electrical components like voltage, resistors and capacitance to represent battery voltage under charging and discharging situations. These equivalent circuit models are highly recommended for use in MATLAB/Simulink battery modeling, thanks to their simple structure, easy computation, and high accuracy levels [34].

Open-circuit voltage, internal resistance, and RC network components model an equivalent circuit of a lithium-ion battery. An open-circuit voltage represents the voltage level at which the battery operates under a no-load situation, while internal resistance is defined as the

voltage drop in the battery as a result of the flow of current through it [35].

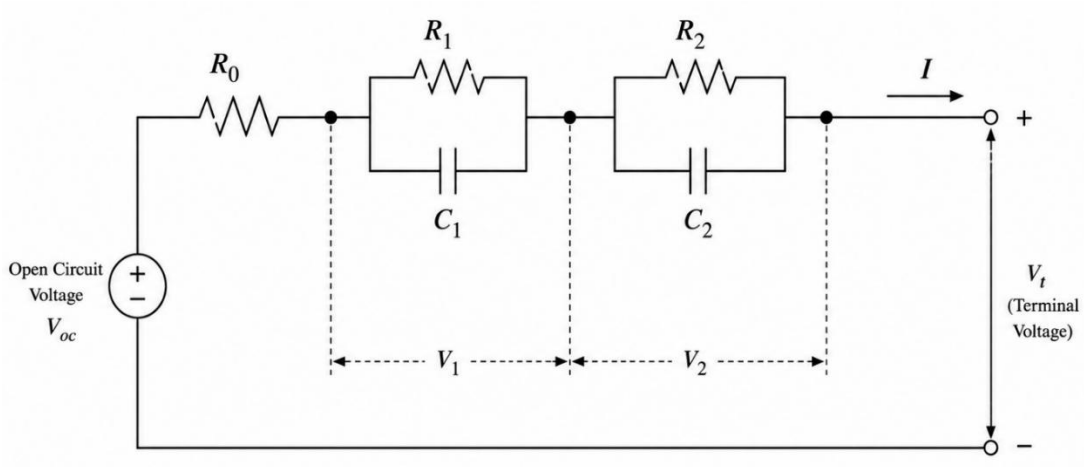

Figure 3.2: Second-order RC Equivalent Circuit Model of Li-Ion Battery

The terminal voltage of the battery is represented as:

$$V_t = V_{oc} - IR_0 - V_1 - V_2 \qquad [3.1]$$

Where:

- V_t = Battery terminal voltage (V)
- V_{oc} = Open-circuit voltage (V)
- I = Battery current (A)
- R_0 = Internal resistance (Ω)
- V_1 = Voltage across first RC branch
- V_2 = Voltage across second RC branch
- C_1, C_2 = Polarization capacitance

The dynamic equations of the RC branches are given by:

$$\frac{dV_1}{dt} = -\frac{V_1}{R_1C_1} + \frac{I}{C_1} \qquad [3.2]$$

$$\frac{dV_2}{dt} = -\frac{V_2}{R_2C_2} + \frac{I}{C_2} \qquad [3.3]$$

An equivalent circuit model is a highly appropriate method that could be used to investigate the performance of the battery in response to voltage changes, charging and discharging, and state of charge variations in different scenarios. The equivalent circuit model method is

applied in this thesis using the MATLAB/Simulink platform.

3.4 Battery Pack Configuration

In reality, for example, in electric vehicles and battery packs, there is insufficient voltage and sufficient energy storage capacity from a single Li-ion cell to get the desired results. Thus, a number of Li-ion cells combined both in series and parallel arrangements to form a battery pack. Battery pack formation is essential because it affects the battery voltage, current capability, and many other parameters.

In a series arrangement, the positive end of one battery is connected to the negative end of another battery. In a series arrangement, the overall voltage will increase, but the current remains constant, like that of a single battery. The voltage and capacity equation of a series–connected battery pack are given as:

$$V_{pack} = \sum_{i=1}^{n} Vi \quad [3.4]$$

$$V_{pack} = nV_{cell} \quad [3.5]$$

$$C_{pack} = C_{cell} \quad [3.6]$$

Where:

- V_{pack} = Total battery pack voltage
- V_{cell} = Voltage of individual cell
- C_{pack} = Battery pack capacity
- C_{cell} = Capacity of individual cell
- n = Number of cells connected in series

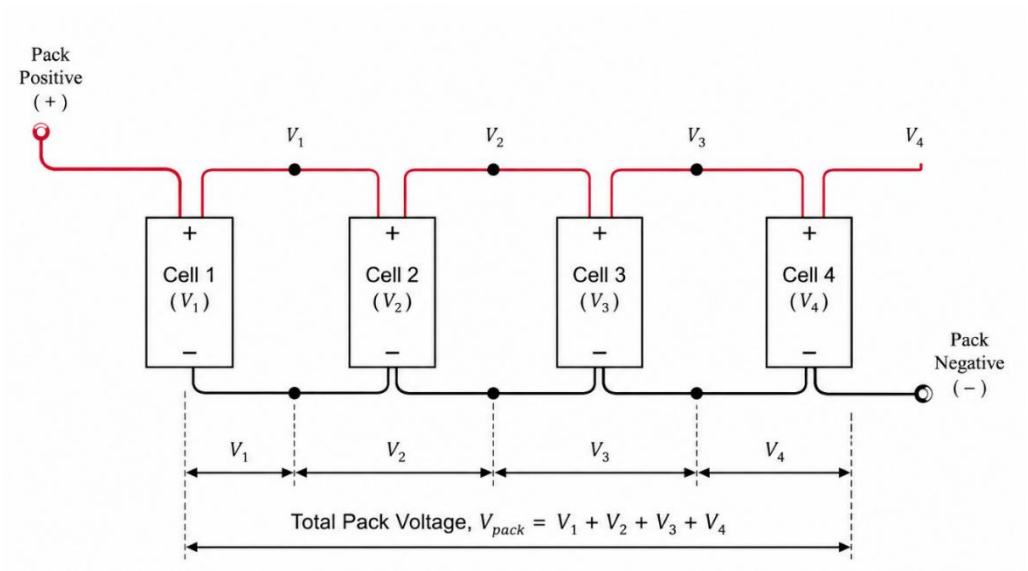

Figure 3.3 Series-connected Li-Ion Battery Pack

In order to implement the hybrid SOC estimation and active balancing in the proposed work, a battery pack having four serially connected lithium-ion batteries is used. This combination makes it easy to study the performance aspects of the cell voltage change, balancing SOC, charging-discharging process, and balancing efficiency.

3.5 Chapter Summary

In this chapter, the modeling and design considerations of the proposed Intelligent Battery Management System for lithium-ion battery packs have been described. Basic properties of lithium-ion batteries, and the method of equivalent circuit modeling have been explained for better understanding of batteries under various operating conditions.

Also, series connection of battery packs used in the proposed system has been explained. In addition, the proposed intelligent Battery Management System architecture, using Hybrid SOC Estimation, Single-Inductor Active Cell Balancing, and Adaptive PWM Control methods has been introduced. The proposed system architecture facilitates SOC estimation, energy transfer between battery cells, minimized SOC variation, and utilization of batteries. The hybrid SOC estimation algorithm is thoroughly discussed in the following chapter

CHAPTER 4

HYBRID STATE OF CHARGE(SOC) ESTIMATION

4.1 Introduction

The State of Charge (SOC) parameter can be considered to be one of the most important parameters used in Lithium-Ion Battery Management Systems (BMS). The State of Charge is the charge capacity of the battery based on the rated capacity of the battery [7]. Therefore, the State of Charge represents the amount of energy present in the battery that can be discharged from the battery. There are various complexities in determining the state of charge because the state of charge depends on the non-linear response and voltage characteristics of the lithium-ion batteries. Changes in current flow, internal resistance, and battery ageing affect the estimation of the state of charge. Consequently, state-of-charge estimation techniques need to be developed[13].

Coulomb Counting, OCV, Neural Network, and Kalman Filter are some of the techniques used for estimating the state of charge in lithium-ion batteries. Of all these state-of-charge estimation techniques, Coulomb counting is widely used due to its simplicity and lower complexity level. But there are integration errors while using the coulomb counting estimation method. However, Kalman filter-based techniques continually correct the estimation errors, unlike other methods [36]. The suggested system consists of an intelligent algorithm for estimating SOC based on combination of the Coulomb Counting technique and Kalman filter adjustment. The SOC estimation algorithm for the suggested system will help improve the precision of the estimated SOC value and minimize estimation errors. It should be noted that this SOC estimation system will be modelled in MATLAB/Simulink.

4.2 Coulomb Counting Method

Coulomb Counting is the most frequently used algorithm for estimating the State of Charge (SOC) of Li-Ion batteries in Battery Management Systems (BMS). Coulomb Counting estimates the SOC based on current flowing through the battery during its charging and discharging. Coulomb Counting is one of the commonly used algorithms due to its simple implementation and minimal computational needs.[37]

Coulomb Counting relies on the initial value of the battery's SOC and current when determining its SOC at any instant in time. Coulomb Counting is mathematically defined as follows:

$$SOC(t) = SOC(t-1) - \frac{I(t)\Delta t}{C_n} \qquad [4.1]$$

Where,

- SOC (t) = present state of charge
- SOC (t - 1) = previous state of charge
- I(t) = battery current
- Δt = sampling interval
- C_n = battery capacity

The SOC value increases during the battery charging process due to the entry of the charge into the battery; while during discharge process of the battery, the SOC value will decrease according to the load current. The main drawback of the Coulomb counting method is it needs accurate current measurement and initialization of the SOC.

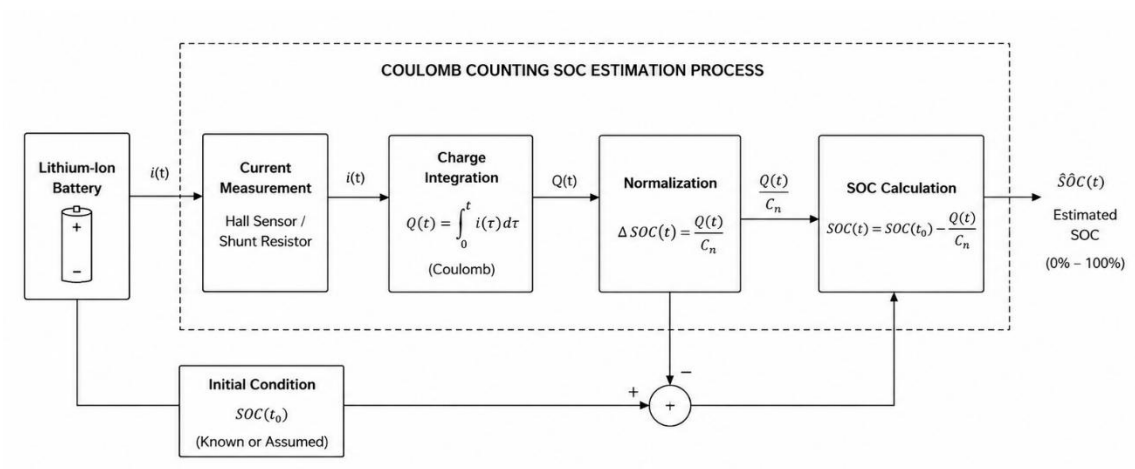

Figure 4.1: Coulomb Counting SOC Estimation Process

Some advantages of the Coulomb Counting method include simple implementation, quick computation, and practicality. Nevertheless, the disadvantage of this method is the potential error accumulation in current measurement and SOC initialization. This results in

growing errors during calculations with time. For this reason, in the proposed approach, the use of Kalman Filters for correcting the results of Coulomb Counting is recommended.[12]

4.3 Kalman Filter-Based SOC Estimation

The Kalman Filter Estimation Technique is a very useful advanced estimation algorithm that is widely used in BMS systems for improving the accuracy of SOC estimates. The Kalman Filter uses the estimates of battery parameters, such as voltage and current to predict and adjust the estimated value of SOC [11]. The Kalman Filter algorithm improves the estimation accuracy compared to conventional approaches.[23]

The Kalman Filter functions on the basis of the prediction-correction approach. The estimate of the next value of SOC is obtained during the prediction process, whereas the estimated value of SOC is adjusted during the correction process using the measurements of battery output parameters.

The mathematical representation of the Kalman Filter is given as:

$$\hat{x}_k = A\,\hat{x}_{k-1} + B\,u_k + K(y_k - C\,\hat{x}_k) \qquad [4.2]$$

where:

- $\hat{x}_k$ = estimated system state
- A = state transition matrix
- B = input matrix
- u_k = control input
- K = Kalman gain
- y_k = measured output
- C = output matrix

Kalman Filter increases the estimation accuracy owing to its ability to reduce the estimation errors caused by sensors, parameter variations, and current integration. Therefore, SOC estimation algorithms based on Kalman Filter algorithms are efficient for managing Li-Ion batteries.

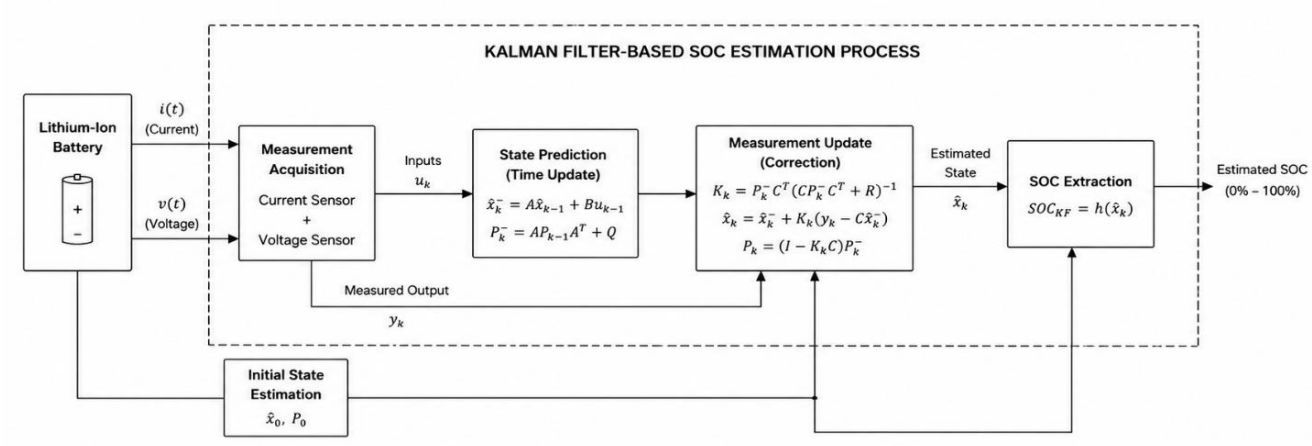

Figure 4.2: Kalman Filter-Based SOC Estimation Process

On the other hand, the Kalman Filter algorithm requires an accurate model of the battery as well as demanding computational resources compared to the traditional technique used for state of charge estimation. As such, in the proposed technique, the Kalman Filter will be combined with the Coulomb Counting method [18]. On the other hand, the Kalman Filter algorithm requires an accurate model of the battery as well as demanding computational resources compared to the traditional technique used for state of charge estimation. As such, in the proposed technique, the Kalman Filter will be combined with the Coulomb Counting method.

4.4 Hybrid SOC Estimation Technique

The new method for estimating SOC is proposed in this research based on using the Coulomb Counting technique together with the Kalman Filter correction. By utilizing the hybrid approach, the state of charge can be estimated in a more reliable way as it combines the strengths of both estimation methods while avoiding their weaknesses.

First of all, it is necessary to note that the strength of the Coulomb Counting technique is related to the simplicity and fast calculation of SOC because it consists of integrating the

current flowing through a battery. At the same time, it should be recognised that there are many errors during estimating the SOC by using Coulomb Counting since there are inaccuracies in sensor readings and a lack of knowledge regarding the initial SOC. Unlike the mentioned estimation technique, the Kalman Filter takes the readings of battery voltage and current and makes corrections to its SOC estimation. Therefore, it is clear that the hybrid approach will ensure better accuracy of the SOC estimation results.

At first, the state of charge is estimated using the Coulomb Counting technique. Afterwards, the Kalman Filter adjusts SOC estimation based on battery voltage and current values.The new hybrid estimation technique may lead to better accuracy and fewer errors in SOC estimation than those obtained using conventional methods. The new hybrid SOC estimation technique was developed using the Simulink/MATLAB simulation software for a lithium-ion battery.

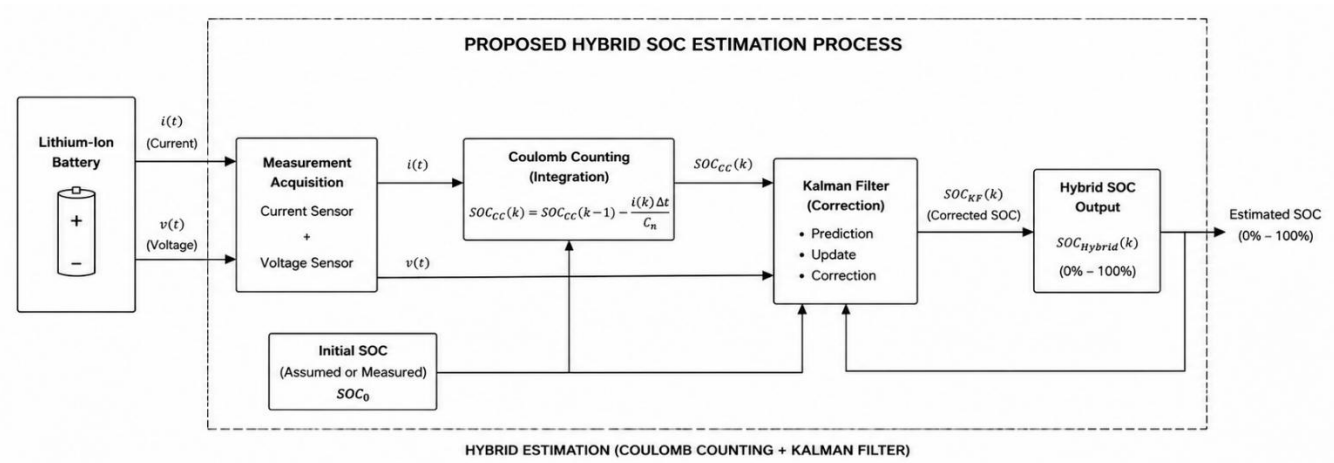

Figure 4.3: Hybrid SOC Estimation Process

In this work, a hybrid state of charge (SOC) estimation technique is developed by combining the Coulomb counting method with a Kalman Filter-based correction. The hybrid estimation approach utilizes the fast response of Coulomb counting and the high accuracy of the Kalman filter to achieve reliable SOC estimation and reduced long-term estimation drift.

First, the SOC is estimated using the Coulomb Counting method as:

$$SOC_{CC}(k) = SOC_{CC}(k-1) - \frac{i(k)\Delta t}{C_n} \qquad [4.3]$$

where $SOC_{CC}(k)$ is the SOC estimated by Coulomb Counting at time step k, $i(k)$ is the battery current, Δt is the sampling time and C_n is the nominal battery capacity.

The estimated $SOC_{CC}(k)$is then used as the a-priori (predicted) state in the Kalman Filter. The Kalman Filter corrects this value using the measured battery voltage. The correction can be expressed as:

$$SOC_{hyb}(k) = SOC_{CC}(k) + K_K[v_{meas}(k) - V_{est}(k)] \quad [4.4]$$

Where $SOC_{hyb}(k)$ is the corrected (hybrid) SOC, K_K is the Kalman gain, meas (k) is the measured terminal voltage, and $V_{est}(k)$ is the estimated voltage obtained from the battery model using $SOC_{CC}(k)$.

The Kalman gain K_K is calculated as:

$$K_K = P_k^- C^T (CP_k^- C^T + R)^{-1} \quad [4.5]$$

The error covariance is updated as:

$$P_K = (I - K_k C)P_k^- \quad [4.6]$$

where P_k^- is the a-priori error covariance, P_K is the a-posterior error covariance, C is the observation matrix, R is the measurement noise covariance, and I is the identity matrix.

The corrected SOC, $SOC_{hyb}(k)$, is continuously updated at each sampling instant, providing improved accuracy, reduced cumulative error, and better dynamic performance under varying operating conditions.

4.5 SOC Estimation Error Analysis

The State of Charge (SOC) estimation is one of the most important functions of the BMS management system. There may be some undesirable effects due to errors in SOC estimation, which are included but are not restricted to battery management, battery charge management, battery balancing, etc. It is therefore necessary that the SOC estimation error be studied to analyze the performance of the hybrid SOC estimation algorithm.[41]

Mathematically, the SOC estimation error can be represented as the difference between actual SOC and estimated SOC through the estimation algorithm. That is,

$$SOC_{error} = SOC_{actual} - Soc_{estimated} \quad [4.7]$$

Where :

- SOC_{error} = SOC estimation error
- SOC_{actual} = Actual battery State of Charge
- $Soc_{estimated}$ = Estimated battery State of Charge

As per the conventional Coulomb counting algorithm, it can be seen that the integral-based error increases with an increase in battery operating time due to errors in sensor reading, current noises, errors in the initial value of SOC, etc.

The Kalman filter uses a correction technique for estimating the SOC through the use of measurements made through the readings of battery voltage and currents. The integral property used in Coulomb counting, along with the correction technique of the Kalman filter, forms the hybrid SOC estimation.

The proposed technique for calculating the state-of-charge is capable of providing better estimation accuracy, improved dynamics, and reliable measurement of SOC in different charging and discharging operations. The performance analysis of the suggested system can be performed using simulation in MATLAB/Simulink using the SOC and estimated SOC data.

4.6 Advantages of Hybrid SOC Estimation

The hybrid State of Charge (SOC) estimation algorithm is an integration of the benefits associated with the Coulomb counting technique as well as Kalman filter correction, thus enhancing the SOC estimation performance with regards to lithium-ion battery technology.

The major advantages of the hybrid SOC estimation technique are as follows:

- Improved SOC estimation accuracy

- Reduction of cumulative integration error
- Better dynamic response under varying load conditions
- Continuous correction of estimated SOC using measured battery parameters
- Improved reliability during charging and discharging operations
- Suitable for real-time Battery Management System applications
- Reduced estimation drift compared to conventional Coulomb Counting methods
- Effective MATLAB/Simulink implementation for lithium-ion battery systems

4.7 Chapter Summary

In this chapter, the Hybrid SOC Estimation technique applied in the suggested battery management system has been discussed. The Coulomb Counting technique and the SOC Estimation technique through the application of Kalman Filter has been studied and incorporated to develop the Hybrid SOC Estimation technique. Analysis of the estimation errors has been performed for both methods to evaluate the performance of the proposed method and discuss their advantages. The developed Hybrid SOC Estimation subsystem provides high accuracy along with lower estimation drift, which becomes very important to provide the necessary inputs for the suggested balancing module in the next chapter.

CHAPTER 5:
SINGLE-INDUCTOR ACTIVE CELL BALANCING

5.1 Introduction

Cell Balancing is one of the key functions carried out by a Battery Management System (BMS). Due to the fact that batteries are made up of a number of Li-Ion cells connected in series and parallel, the differences in their properties, due to manufacturing errors, different internal resistances, charging and discharging characteristics of the cells, and other reasons, may result in cells having different levels of voltage and charge state [4]. Such disparities lead to lower efficiency of the battery, reduced capacity, and decreased energy, as well as shorten its life.[6]

Passive balancing entails the dissipation of excess energy of cells with high energy levels into heat. Even though this method is relatively simple and cheap, it has its disadvantages, including low efficiency, sluggishness, and energy loss. In active balancing, the energy stored in batteries with a high charge level is transferred to the ones with a lower charge level with the use of energy storage elements, including capacitors, transformers, and inductors.[7][8]

Various methods for active balancing can be found. Nevertheless, the most promising solution for the multi-cell balancing of Li-ion batteries is the single-inductor active balancing method since it does not only simplify circuit implementation but also guarantees efficient energy flow. Intelligent balancing control techniques further improve balancing efficiency by controlling switching actions according to cell state of charge difference. For this purpose, in this study, an intelligent single-inductor active balancing method with adaptive PWM control technique for Li-ion battery packs has been proposed using MATLAB/Simulink.

5.2 Cell Balancing Techniques

Balancing methods are used in BMS to achieve evenness in the voltages and states of charge of the lithium-ion batteries when configured as a battery pack. Balancing helps to optimize the performance of the batteries through increasing their capacities, reducing losses

of energy, and extending their longevity. The balancing methods of lithium-ion battery cells can be classified either as active or passive balancing.[5][7]

5.2.1 Passive Cell Balancing

Passive balancing of cells in a lithium-ion battery is among the easiest balancing techniques. The excess energy in the high-voltage cells is wasted in the form of heat energy during balancing using resistors.[7] Passive balancing techniques are simple to execute and cheap, but they waste more energy, have low efficiencies in balancing, and consume long periods to balance large battery packs in EVs and ESS.[8]

5.2.2 Active Cell Balancing

In active balancing techniques of cells, energy from high-state-of-charge cells is shifted to the lower state of charge cells using energy storage units such as capacitors, inductors, transformers, and DC-DC converters.[23]

As far as different active balancing methods are concerned, the advantages associated with single inductor active balancing include simplicity, high energy transfer efficiency, and effectiveness in balancing multi-cell battery systems. This makes active balancing more appropriate for electric cars compared to passive balancing.

Table 5.1 Comparison of Passive and Active Cell Balancing Techniques

Parameter	Passive Balancing	Active Balancing
Energy Loss	High	Low
Balancing Efficiency	Low	High
Balancing Speed	Slow	Fast
Circuit Complexity	Simple	Moderate
Heat Generation	High	Low
Energy Transfer	Dissipative	Non-Dissipative
Application Suitability	Small Battery Packs	EV and Large Battery Packs

From Table 5.1, it can be observed that active balancing techniques provide improved balancing efficiency, reduced energy loss, and better battery utilization compared to passive balancing methods.

5.3 Single-Inductor Active Balancing Topology

The topology of single-inductor-based active balancing is used to achieve effective energy transfer between lithium-ion batteries. In the proposed topology, energy is transferred from cells with a higher state of charge (SOC) to the cells with a lower SOC in order to minimize SOC variation and improve balancing performance [42]. In contrast to the traditional balancing method, the single-inductor-based balancing method is simpler to implement and offers effective use of energy.[43]

The basic components of the active balancing topology include the balancing inductor, power switches, diodes, and Li-Ion batteries. In the balancing process, the balancing inductor is used to store energy from the cell with a higher SOC and to transfer the stored energy to the cell with a lower SOC by the process of switching action.

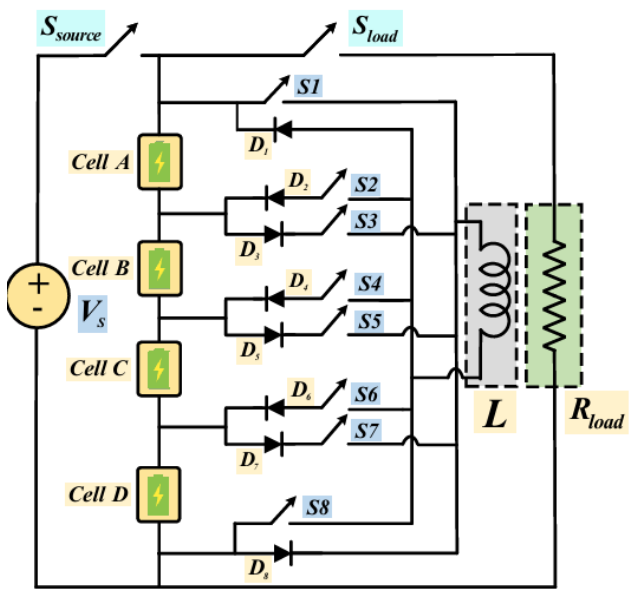

Figure 5.1: Single-Inductor Active Balancing Topology

1. The voltage-current relationship of the balancing inductor is represented as:

$$V_L = L\frac{di_L}{dt} \qquad [5.1]$$

Where:

- V_L = Inductor voltage
- L = Inductance

- $\frac{di_L}{dt}$ = Rate of change of inductor current

2. The energy stored in the inductor during balancing operation is given as:

$$E_L = \frac{1}{2} L i_L^2 \qquad [5.2]$$

Where:

- E_L = Energy stored in inductor
- L = Inductance
- i_L = Inductor current

3. Inductor Current during balancing operation is given as:

$$i_L(t) = i_L(0) + \frac{1}{L}\int_0^t V_L(\tau)d\tau \qquad [5.3]$$

Where:

- $i_L(0)$ = Initial inductor current (A)
- $i_L(t)$ = Initial inductor current
- $V_L(\tau)$ = Inductor voltage
- L = Inductance

4. Current Ripple in the inductor during switching is given as:

$$\Delta i_L = \frac{V_L T_{on}}{2} \qquad [5.4]$$

Where:

- T_{on} = Switch on time (s)

5. Power Transferred during balancing operation is given as:

$$P_{bal} = V_{avg}, I_{bal} \qquad [5.5]$$

Where:

- P_{bal} = Average power transferred (W)

- V_{avg} = Average voltage across the inductor(V)

5.4 Adaptive PWM Control

In the active balancing system introduced above, an adaptive pulse width modulation (PWM) control technique is utilized to control the switching process of the balancing circuit based on the variations of state of charge (SOC). The use of adaptive PWM control allows for changing the duty cycle during balancing to make sure that balancing is executed efficiently, with minimal energy consumption and the shortest balancing time.

The adaptive balancing control method continuously detects the state of charge (SOC) of each battery. When there are large differences between the SOCs, the adaptive balancing controller recognizes the battery with the highest SOC as the source battery, while the battery with the lowest SOC is the destination battery. A PWM control signal will then be created to control the switching process of balancing MOSFETs.

The adaptive PWM controller system controls the duty cycle by comparing the differences in the states of charge of the battery cells. If the difference in state of charge is high, the balancing is performed with a high duty cycle. On the other hand, a lower difference in state of charge results in low balancing switching operations to conserve power.

The intelligent adaptive PWM controller system ensures that there is efficient balance operation and minimizes balancing losses. The following equations are used in the proposed intelligent adaptive PWM control.

1. Duty Cycle Of PWM signal

$$D = \frac{T_{on}}{T} \qquad [5.6]$$

Where:

- D = Duty cycle ($0 \leq D \leq 1$)
- T_{on} = Switch ON time (s)
- T=Total switching period (s)

2. Switching Frequency

$$f_s = \frac{1}{T} \qquad [5.7]$$

Where:

- $\boldsymbol{f_s}$ = Switching frequency (Hz)
- T = Switching period (s)

3. SOC Difference Between Cells

$$\Delta SOC = SOC_{max} - Soc_{min} \quad [5.8]$$

Where:

- ΔSOC = Difference between highest and lowest SOC
- SOC_{max} = Maximum (highest) cell SOC
- Soc_{min} = Minimum (lowest) cell SOC

5.5 Advantages of Single Inductor Active Balancing

The single inductor active balancing method has many advantages compared to the current traditional passive balancing methods that are commonly utilized with lithium-ion batteries. Using a single inductor to transmit power alongside adaptive PWM balancing can increase balancing efficiency, reduce balancing losses, and boost battery performance.

The major advantages of the single inductor active balancing technique are as follows:

- Reduced energy loss during balancing operation
- Improved balancing efficiency through energy transfer between cells
- Faster balancing speed compared to passive balancing methods
- Reduced State of Charge (SOC) deviation among battery cells
- Improved battery utilization and usable capacity
- Reduced heat generation during balancing operation
- Adaptive PWM-based intelligent switching control
- Enhanced battery lifespan and operational reliability
- Suitable for electric vehicle and energy storage applications
- Effective MATLAB/Simulink implementation for Battery Management Systems

The proposed intelligent active balancing system improves the overall performance and reliability of lithium-ion battery packs by maintaining uniform SOC distribution and minimizing balancing losses during battery operation.

CHAPTER 6:

MATLAB/SIMULINK IMPLEMENTATION

6.1 Introduction

MATLAB/Simulink simulation software is widey used for modelling, simulating, and analyzing BMS of lithium-ion batteries. The simulation tool provides an effective platform to create battery models, estimation methods, balancing algorithms, and power electronic converters.

In the methodology, the whole BMS has been modelled using MATLAB/Simulink simulation environment that includes the lithium-ion battery pack, SOC hybrid estimation algorithm, single-inductor active balancing circuit, adaptive PWM control algorithm, and balancing algorithm in MATLAB/Simulink platform only.

The battery management system model is capable of sensing the battery voltages, currents, and SOC values for performing smart balancing operations on batteries. The SOC estimation block uses Coulomb counting and Kalman filter methods for hybrid estimation of SOC values, whereas the active balancing algorithm controls the flow of energy between batteries for intelligent balancing operations.

Simulation of the suggested system in MATLAB/Simulink allows the study of such parameters as the charging/discharging parameters of the battery, changes in the state of charge, balancing, switching behavior, and energy conversion processes when operating dynamically. The suggested simulation model will be a valuable tool in the analysis of performance of the suggested Battery Management System.

6.2 Overall MATLAB/Simulink Model of Proposed System

In fact, the whole simulation design of the proposed battery management system involves the use of SOC estimation with hybrid estimation and intelligent active cell balancing of lithium-ion battery packs. Some of the key aspects in the simulation design include modeling of the lithium-ion battery pack, hybrid SOC estimation, adaptive PWM control of balancing, single-inductor active balancing, switching control, and output monitoring blocks.

The lithium-ion battery pack is modeled by using a subsystem of four cells of battery which are connected in series. The voltage and current sensing blocks are included to provide continuous monitoring of the battery cells' operational state during charging and discharging

stages. The measured battery parameters help in facilitating SOC estimation and balancing operations.

The SOC estimation involves the combination of Coulomb counting and Kalman filtering to improve SOC estimation and reduce SOC estimation errors. The updated SOC values are provided to the balancing controller to carry out balancing operations.

The balancing process utilizes single-inductor balancing in order to balance the battery cells by transferring energy from high SOC battery cells to low SOC battery cells. The balancing process uses the SOC values of all battery cells using adaptive PWM control process.

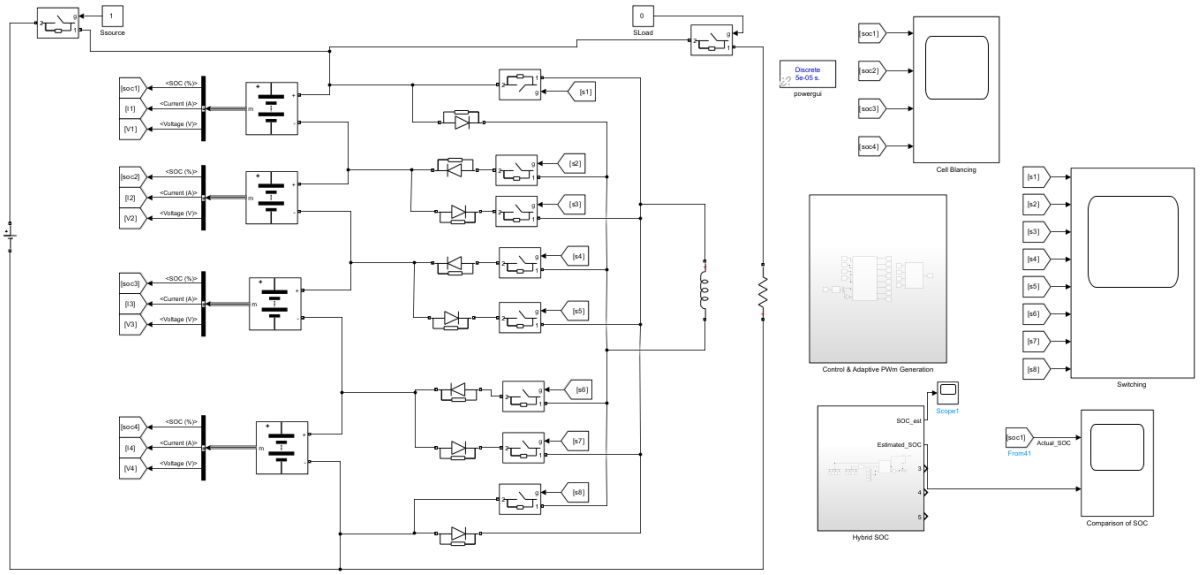

Figure 6.1 Overall MATLAB/Simulink Model of Proposed System

The developed MATLAB/Simulink implementation provides an effective platform for analyzing battery voltage characteristics, SOC variation, balancing performance, switching operation, and energy transfer behavior under different operating conditions

6.3 Battery Pack Subsystem

Battery pack subsystem means the lithium-ion battery pack to be incorporated in the design of the proposed Battery Management System. Therefore, in the MATLAB/Simulink system design, four lithium-ion batteries have been interconnected in series to generate the required voltage of the battery pack.

A lithium-ion battery cell is depicted by a battery subsystem block in MATLAB/Simulink using the electrical properties of the batteries. Interconnection of the battery cells in series facilitates evaluation of their behavior during the charging and discharging processes, voltages, and imbalance in the battery cells.

Battery cells' voltage sensing and current sensing are monitored using sensing blocks incorporated in the subsystem. These battery properties are utilized in calculating the state-of-charge of the battery management system and active balancing of the battery management system.

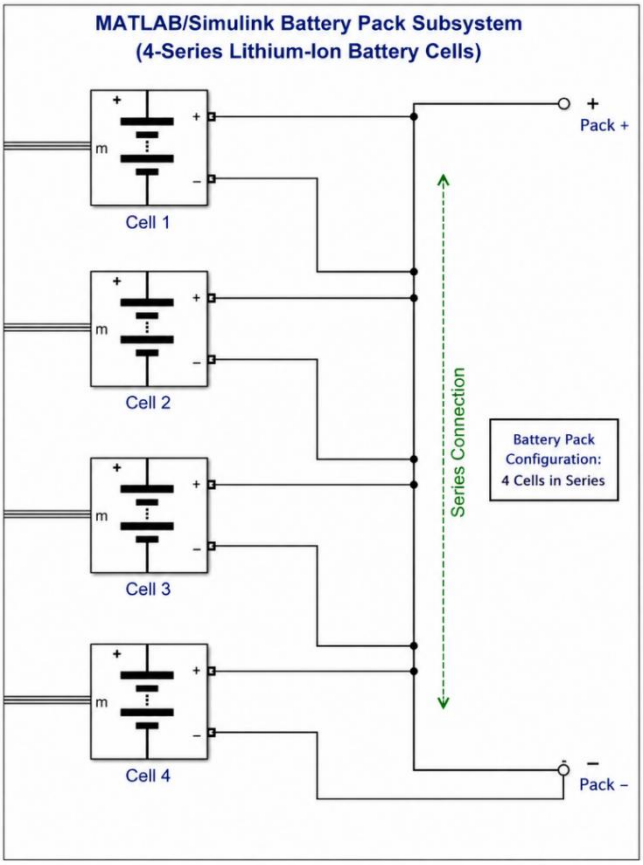

Figure 6.2 shows the MATLAB/Simulink battery pack subsystem used in the proposed work.

The developed battery pack subsystem provides an effective platform for analyzing battery voltage variation, charging/discharging characteristics, SOC deviation, and balancing performance under different operating conditions.

The total battery pack voltage for series-connected cells is represented as:

$$V_{pack} = \sum_{i=1}^{n} Vi \quad [6.1]$$

$$V_{pack} = nV_{cell} \quad [6.2]$$

$$C_{pack} = C_{cell} \quad [6.3]$$

Where:

- V_{pack} = Total battery pack voltage
- V_{cell} = Voltage of individual cell
- C_{pack} = Battery pack capacity
- C_{cell} = Capacity of individual cell
- n = Number of cells connected in series

6.4 Hybrid SOC Estimation Subsystem

The SOC Estimation Subsystem-Hybrid has been designed specifically to give precise estimations of the State of Charge of each of the batteries in the proposed battery management system. The SOC Estimation Subsystem is based on the combination of Coulomb Counting Methodology and Kalman Filtering Methodology in order to accomplish the above-mentioned objective.

The input for the SOC estimation subsystem comes from the battery pack subsystem as the battery voltages and currents. Initially, the value of the SOC is estimated through the Coulomb counting methodology taking into account the current values. After that, the obtained SOC value is corrected through the Kalman filtering methodology using the voltages as inputs.

The SOC estimation using the Kalman filter includes correcting the estimated value of the SOC according to measured battery parameters to restrict possible errors in the estimation process. After the SOC estimation through the proposed estimation approach, the final output will be processed further by the balancing control algorithm to enable intelligent active balancing.

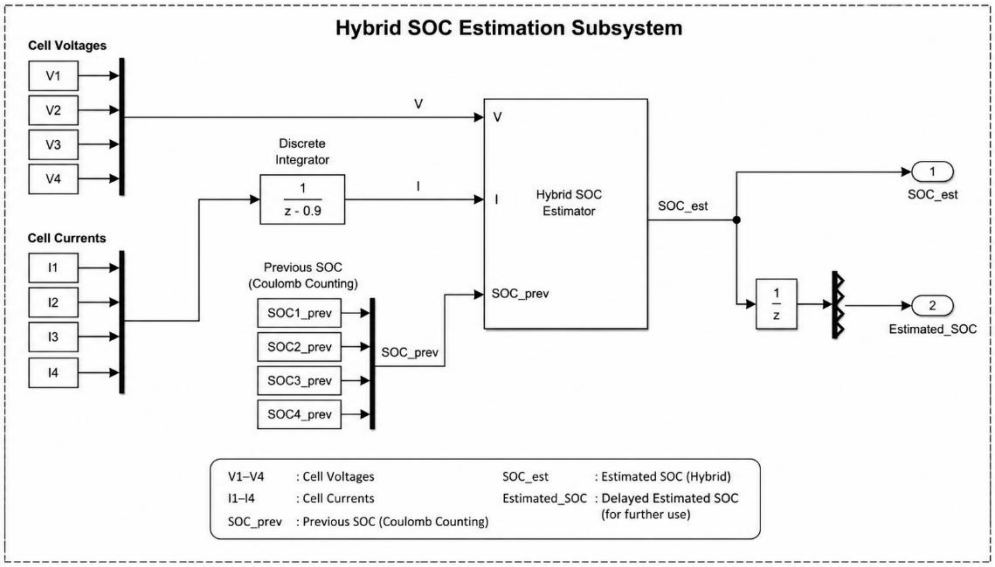

Figure 6.3 shows the Hybrid SOC Estimation Subsystem implemented in MATLAB/Simulink.

The SOC estimation subsystem that has been developed is able to offer precise SOC estimation, restrict any drift error, be responsive to input changes, and ensure proper battery monitoring ability. The final hybrid SOC is generated using the weighted equation:

$$SOC_{Hybrid} = \omega_1 SOC_{CC} + \omega_1 SOC_{kF} \quad [6.4]$$

Where SOC_{CC} is the SOC obtained from Coulomb Counting SOC_{kF} is the SOC obtained from the Kalman Filter and ω_1 and ω_2 are weighting factors. The value of ω_1 and ω_2 are selected such that:

$$\omega_1 + \omega_2 = 1 \quad [6.5]$$

In the proposed Simulink implementation, the hybrid SOC estimator consists of current measurement, integrator, gain, Kalman Filter correction block, weighting block, summation block, and display/scope blocks. The output of this estimator provides a stable and accurate SOC value for monitoring and control purposes.

6.5 Intelligent Active Balancing Subsystem

Intelligent Active Balancing Subsystem is developed to minimize the SOC mismatch among the lithium ion battery cells that are arranged in series configuration within a battery pack.

The energy transfer will occur between high SOC and low SOC batteries in a smart way through an inductor active balancing method based on adaptive PWM.

The estimated SOC values obtained from the Hybrid SOC Estimation Subsystem are regularly updated to the balancing controller. By comparing the SOC values of all battery cells within the battery pack, the maximum SOC value of a battery cell is considered as source cell and the minimum SOC value of a battery cell is taken as destination cell.

The SOC deviation among battery cells is calculated as:

$$\Delta SOC = SOC_{max} - Soc_{min} \quad [6.6]$$

Where:

- ΔSOC = SOC deviation among battery cells
- SOC_{max} = Highest cell SOC
- SOC_{min} = Lowest cell SOC

The balancing operation is activated when the SOC difference exceeds a predefined balancing threshold and is represented as:

$$\Delta SOC > \Delta SOC_{th} \quad [6.7]$$

Where:

- ΔSOC = SOC deviation among cells
- ΔSOC_{th} = Predefined balancing threshold

The average balancing power transferred during the balancing process is given by:

$$P_{bal} = V_L I_{bal} \quad [6.8]$$

Where:

- P_{bal} = Balancing power
- V_L = Inductor voltage
- I_{bal} = Balancing current

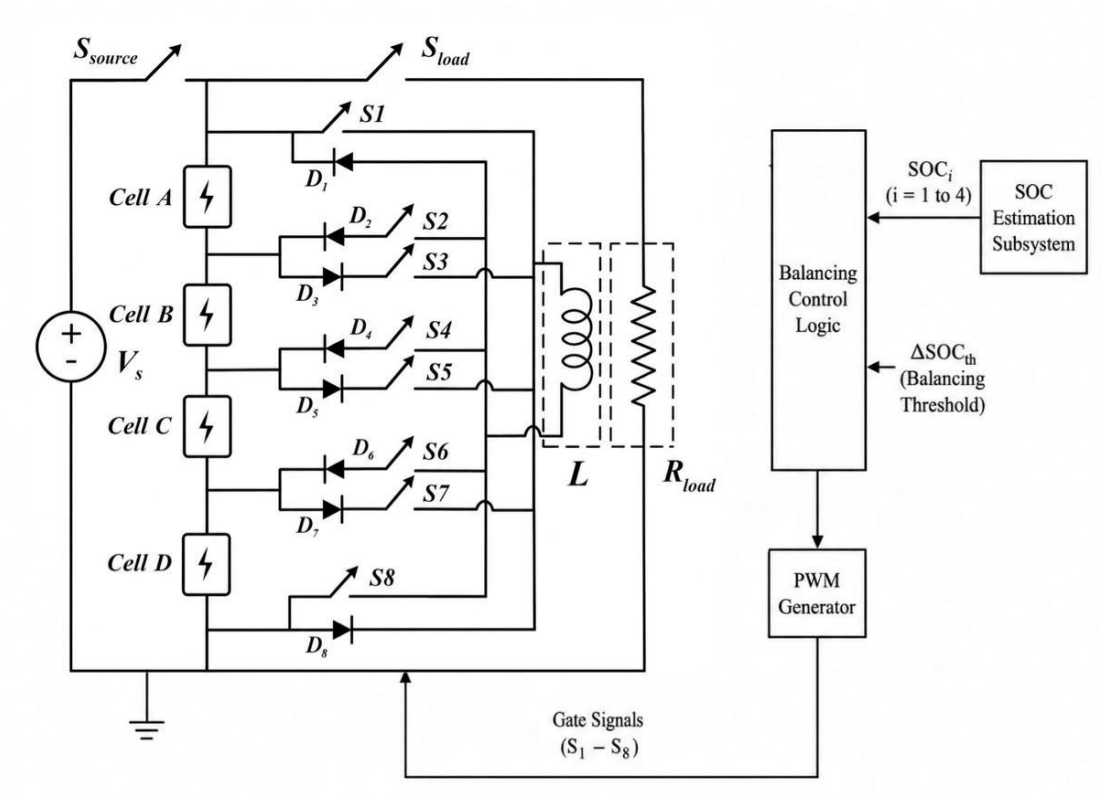

Figure 6.4: shows the MATLAB/Simulink Intelligent Active Balancing Subsystem

The developed intelligent active balancing subsystem improves balancing efficiency, reduces energy loss, minimizes SOC deviation among cells, and enhances the overall performance and lifespan of the lithium-ion battery pack.

6.6 Adaptive PWM Control Implementation

Introduction of the Adaptive PWM Control Implementation will serve as a feedback mechanism for the switching mechanism of the intelligent active balancing subsystem depending on the state-of-charge (SOC) of each individual cell battery. Feedback mechanism will constantly receive SOC data through the Hybrid SOC Estimation Subsystem and send the respective PWM outputs.

Adaptive PWM control is achieved by the calculation of the SOC difference among various cells and determining that there is a requirement for balancing. In case the SOC difference exceeds the balancing threshold, the adaptive PWM control system will start a balancing operation where it sends PWM signals to the balancing switches. The PWM signal depends on the magnitude of the SOC difference.

The duty cycle of the PWM signal is represented as:

$$D = \frac{T_{on}}{T} \qquad [6.9]$$

Where:

- D = Duty cycle ($0 \leq D \leq 1$)
- T_{on} = Switch ON time (s)
- T=Total switching period (s)

The switching frequency of the PWM controller is given by:

$$f_s = \frac{1}{T} \qquad [6.10]$$

Where:

- $\boldsymbol{f_s}$ = Switching frequency (Hz)
- T = Switching period (s)

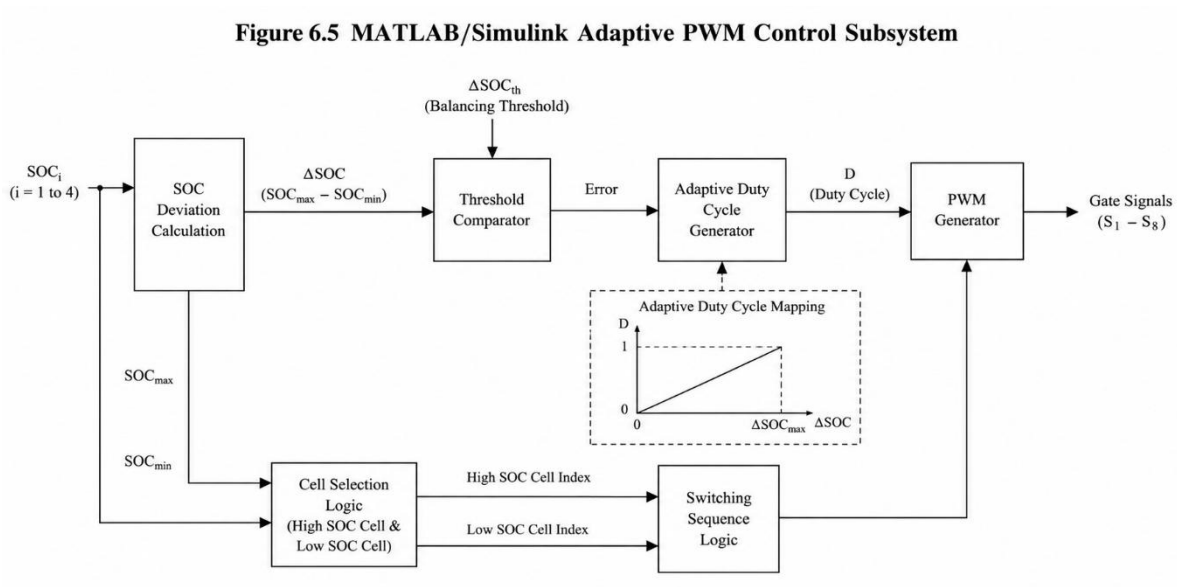

Figure 6.5: MATLAB/Simulink Adaptive PWM Control Subsystem used in the proposed system

The developed adaptive PWM controller provides intelligent switching control, improved balancing efficiency, reduced energy loss, and reliable operation of the proposed active balancing system.

6.7 Simulation Parameters

The suggested intelligent Battery Management System has been modelled and studied through MATLAB/Simulink simulation by considering a four-cell lithium-ion battery pack. The simulation has been performed using different electrical and control parameters for studying the performance of the suggested hybrid SOC estimation system and intelligent active balance system under various operating conditions.

Table 6.1: Simulation Parameters

Parameter	Symbol	Value
Battery Type	—	Lithium-Ion
Number of Cells	n	4
Nominal Cell Voltage	V_{cell}	3.6 V
Fully Charged Cell Voltage	V_{max}	4.2 V
Cut-off Cell Voltage	V_{min}	3.0 V
Cell Capacity	C_{cell}	3.07 Ah
Balancing Inductor	L	1 mH *(or as per model)*
Load Resistance	R_{load}	1 Ω *(or as per model)*
Switching Frequency	fs	500 hz *(or as per model)*
SOC Balancing Threshold	ΔSOC_{th}	5%
Sampling Time	Δt	0.1 s
Simulation Time	Tsim	75 s

These simulation parameters have been chosen depending on the characteristics of the lithium-ion battery and requirements of the balancing control strategy. Through these parameters, the performance of the battery voltage, accuracy of SOC estimation, battery balancing, pulse width modulation, and energy transfer can be analyzed.

6.8 Working Operation of Proposed System

The proposed Battery Management System can be described in terms of applying the hybrid state of charge estimation along with intelligent active balancing of the batteries in one unified MATLAB/Simulink environment. Continuous observation of the voltage, current, and SOC parameters is made for efficient monitoring and balancing process.

First of all, the subsystem 'Battery Pack' receives information concerning the voltages and currents of each cell inside the lithium-ion battery. This data is then transmitted to the subsystem 'Hybrid SOC Estimation', where the estimations of the state of charge of each cell are computed according to the Coulomb Counting approach. After that, SOC values are further refined with the use of a Kalman Filter.

At last, refined SOC values are passed into the subsystem 'Intelligent Active Balancing'. Inside it, the balancing controller checks out the SOC values of all cells within the battery and calculates the SOC difference. If the SOC difference is greater than the specified balancing threshold value, the controller starts the balancing process.

The PWM Switching Signals Generating Block manages the switching process of signals depending on the difference in SOC among the cells. In case the controller's decision is to do balancing, the balancing switches are switched ON, and the extra energy of the cell having a higher SOC level is transferred to another cell with the help of the balancing inductor.

The process of balancing will be carried out until the SOC levels among all cells are equal or the SOC deviation is below the threshold value for balancing. While doing balancing, the monitoring of the battery voltage, current, SOC deviation, balancing current, and switching signals is done in MATLAB/Simulink Output Blocks.

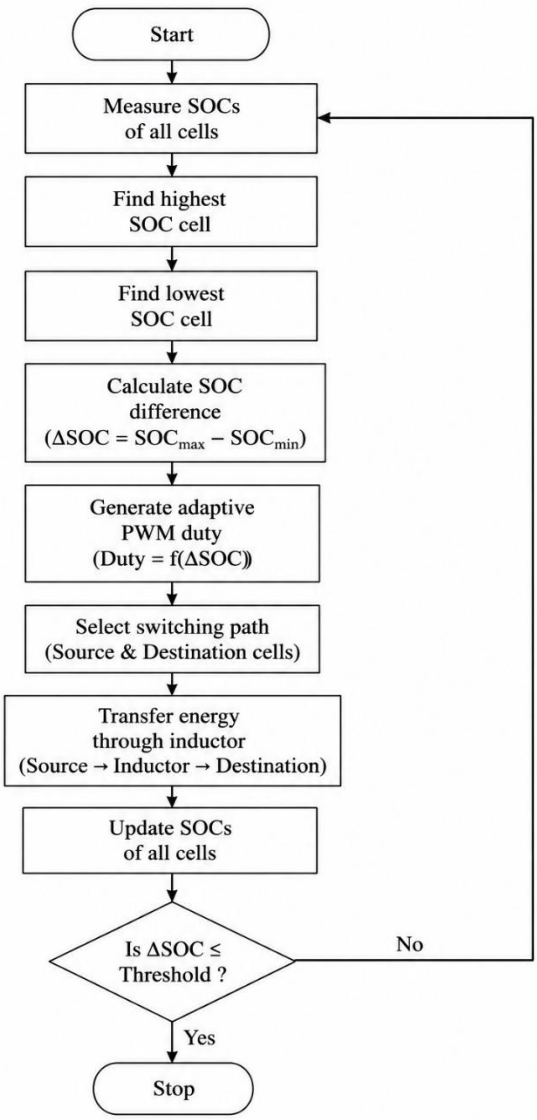

Figure 6.6: Overall Working Process of Proposed System

CHAPTER 7

RESULTS AND DISCUSSION

1.1 INTRODUCTION

In this chapter, simulations results are provided concerning the performance analysis of the intelligent BMS design that has been carried out in MATLAB/Simulink. This intelligent BMS comprises hybrid state of charge estimation technique, intelligent active cell balancing strategy, and adaptive PWM controller to enable efficient working of lithium-ion batteries.

The performance of the proposed design is tested under different test cases, such as SOC estimation error, battery voltage behavior, energy transfer, balancing efficiency, PWM switching characteristic, and so forth. The simulation results have been performed using the MATLAB/Simulink platform introduced in chapter six.

In Hybrid SOC Estimation Subsystem, the application of Coulomb counting SOC estimation technique with Kalman filter correction will be utilized to enhance the estimation accuracy. In the Intelligent Active Balancing Subsystem, a single inductor balancing method will be used for transferring energy from high state of charge cells to low state of charge cells in order to lower SOC estimation error. Further, PWM Adaptive Control Subsystem will be used for controlling the balancing process through generation of switching signals based on the difference between SOC values.

Results of Simulation: The results of simulation discussed in this chapter have confirmed the efficiency of the suggested intelligent Battery Management System in attaining balance in SOC, efficient utilization of the battery, minimal energy losses, and efficient performance of the battery system. In the next few sections, we shall talk about analysis of SOC estimation, battery voltage, balancing, PWM control, and system performance.

7.2 Hybrid SOC Estimation Results

The performance evaluation process for the recommended hybrid SOC estimation method was carried out when the device was being charged or discharged. The calculated SOC for the recommended hybrid SOC estimation model was compared to that of the actual SOC of

the lithium-ion battery pack.

7.2.1 SOC Estimation During Charging Condition

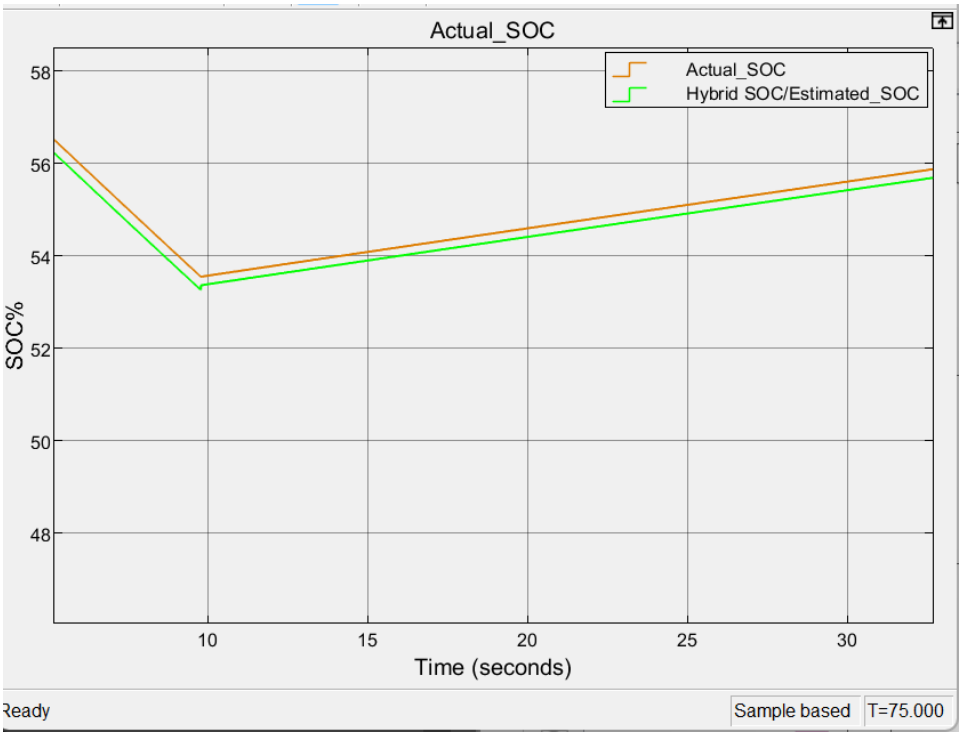

Figure 7.1 Comparison of Actual SOC and Hybrid Estimated SOC During Charging Condition

The graphical illustration of the comparison between the Actual SOC and Hybrid Estimated SOC is illustrated in Fig. 7.1. From the following graph, it can be observed that the estimated SOC value coincides with the actual SOC value as the process of charging continues. This is because both SOC estimates have similar behavior during the charging process without significant deviation from each other.

The Hybrid SOC Estimation method is highly efficient in SOC estimation, giving quite accurate results. The small variation between both SOC values is insignificant because it remains within the permissible limit.

7.2.2 SOC Estimation During Discharging Condition

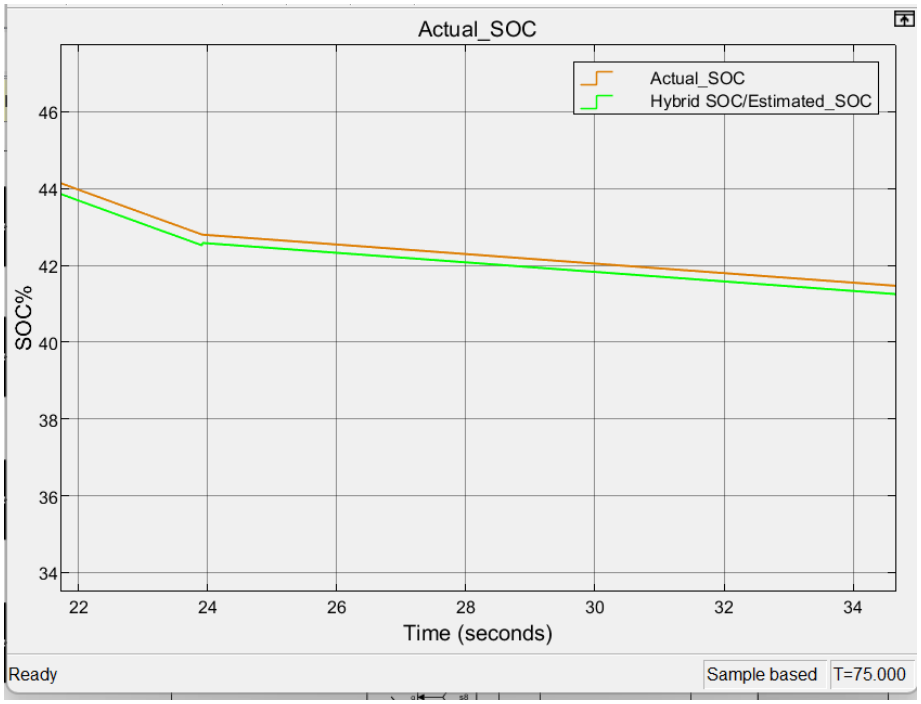

Figure 7.2 Comparison of Actual SOC and Hybrid Estimated SOC During Discharging Condition

Figure 7.2 displays the comparison of Actual SOC and Hybrid Estimated SOC during discharging of the battery. Similar to the behavior during charging, there is a very close similarity between the actual and the hybrid estimated SOC.

It can be seen from the graphs above that the Hybrid SOC Estimation subsystem suggested by the authors is able to track SOC loss quite accurately. It is known that Kalman Filter correction is required to minimize any potential estimation errors associated with the Coulomb counting technique. A high correlation between actual SOC and estimated SOC shows the effectiveness of the authors' proposal.

Discussion

The simulation done under charging and discharging mode shows that the suggested hybrid SOC estimation method is effective. From the results obtained, it can clearly be observed that the SOC estimation value obtained is very close to the real SOC value, indicating that there is a great improvement in SOC estimation accuracy as well as in battery management.

The use of Coulomb Counting alongside Kalman filtering improves SOC estimation accuracy to a large extent.

7.3 Cell Balancing Performance During Charging Condition

The performance of the intelligent active balance system when charging the batteries was examined by comparing the change in the state of charge of the individual cells before and after balancing. An efficient balancing system should ensure that there is minimum disparity in the state of charge of the cells in the battery.

7.3.1 SOC Variation Without Balancing During Charging Condition

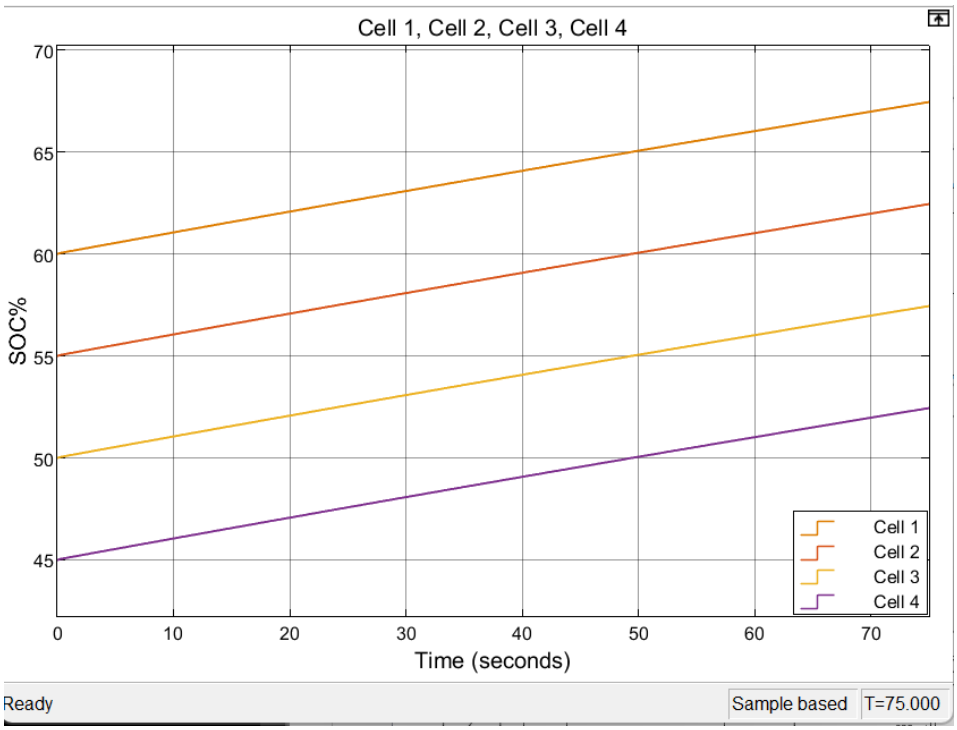

Figure 7.3 SOC Variation Without Balancing During Charging Condition

Figure 7.3 below presents the SOC profiles for four battery cells in lithium-ion batteries without the implementation of any balancing control. The initial SOC levels have been varied to create an imbalance among the battery cells concerning the SOC.

From the figure above, it can be observed that all cells continue charging, but there is no decrease in SOC deviation even after some time of charging. Cells having a high level of SOC maintain their level, whereas the cells having low SOC levels lag behind. Therefore, there is no decrease in the SOC deviation of cells without balancing control.

7.3.2 SOC Variation With Proposed Active Balancing During Charging Condition

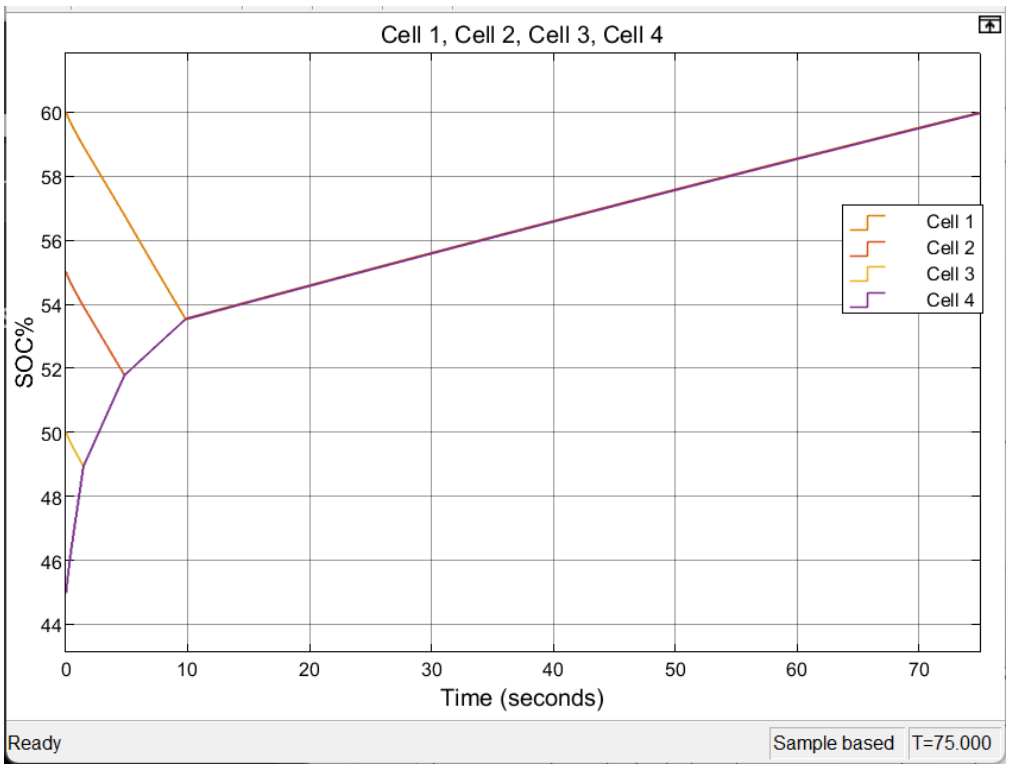

Figure 7.4 SOC Variation With Proposed Active Balancing During Charging Condition

A schematic representation of SOC variations of the battery cells subject to active intelligent balancing control during the charging process can be seen in Figure 7.4 below. The balancing control system continuously monitors the SOC of all cells and implements a single inductor active balancing technique for redistributing energy from cells with high SOC values to other cells with low SOC values.

As can be seen from the diagram, the SOC level variations occur along the same path. In this regard, the differences in SOC levels among different cells are greatly reduced compared to the case without balancing control. Consequently, the balancing control system manages to balance the charge in the cells despite their continuous charging.

Discussion

The effectiveness of the active balancing system proposed during the charging process can be noted by comparing Figures 7.3 and 7.4. This shows that without balancing, the difference in SOC between the cells will not vary at all during the charging process. Through the implementation of the proposed balancing approach, there is an observed reduction in the value of SOC deviation since the energy distribution takes place.

In conclusion, the results show that the proposed approach is indeed effective during the charging process.

7.4 Cell Balancing Performance During Discharging Condition

Further research was carried out to assess the balancing capabilities of the suggested intelligent active balancing strategy in the scenario when the battery is being discharged. The difference in SOC of the battery cells was calculated both before and after the battery balancing using the suggested technique.

7.4.1 SOC Variation Without Balancing During Discharging Condition

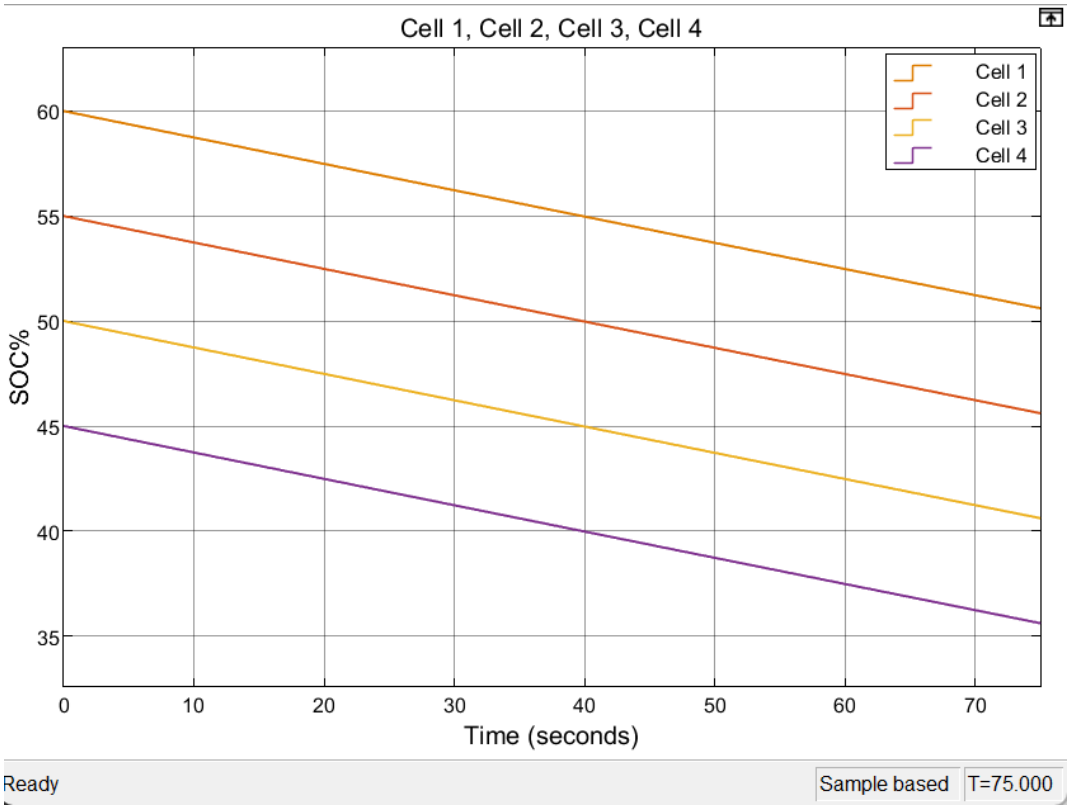

Figure 7.5 SOC Variation Without Balancing During Discharging Condition

SOC change among four batteries used in the test without balance control has been shown in Figure 7.5, in relation to discharge of the batteries. There was some discrepancy in SOC in terms of initial values of the batteries.

During discharge process, discharge happens in all batteries, yet the SOC discrepancy remains throughout the entire process. The batteries with low SOC reach discharge limits faster compared to those with high SOC. This may affect the available capacity of all batteries.

From the above results, it is evident that there will still be SOC discrepancy during discharge without balance control**.**

7.4.2 SOC Variation With Proposed Active Balancing During Discharging Condition

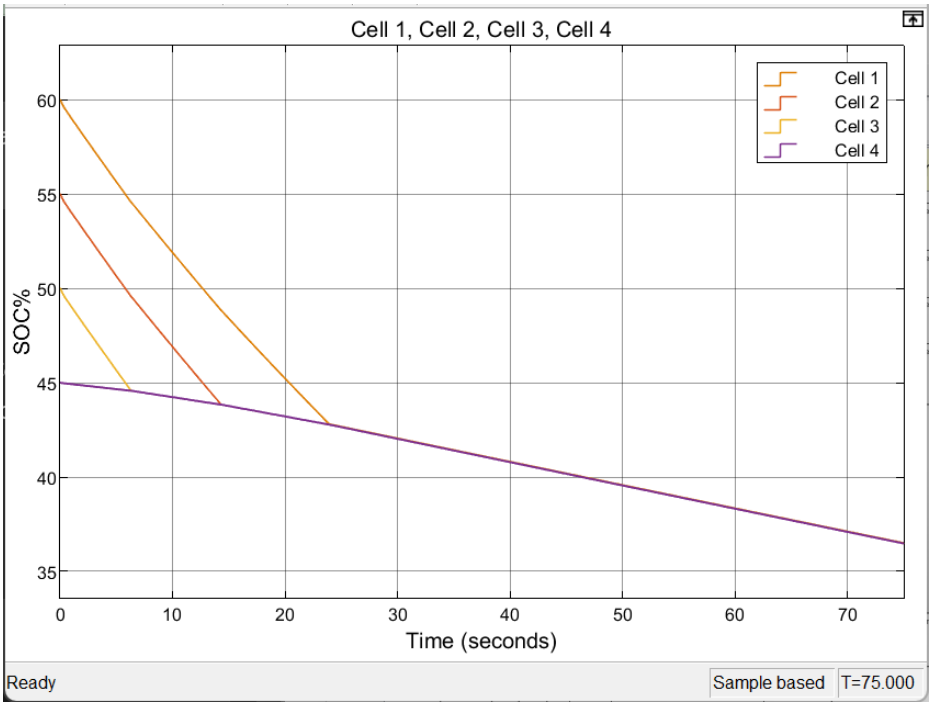

Figure 7.6 SOC Variation With Proposed Active Balancing During Discharging Condition

Figure 7.6 shows the SOC plot of the battery cells when the proposed active balancing scheme algorithm is applied during the discharging mode. The balancing control mechanism monitors the SOC value of the battery cells and transfers energy from battery cells with high SOC values to battery cells with low SOC values using the single inductor balancing scheme. As shown in the figure above, it is clear that the SOC value is balanced to form one single plot during the discharging mode. There is a significant reduction in the difference between the SOC values of the battery cells because of the balancing process.

Discussion

When comparing the two charts presented above (Figure 7.5 & Figure 7.6), the viability of the intelligent active balancing approach that has been utilized becomes highly noticeable especially in relation to the discharging procedure. The differences between the SOCs for the cells without balancing become rather extreme; yet, with the utilization of the intelligent active balancing approach suggested, such differences can be reduced.

The transfer of energy among cells with the help of active balancing results in the higher homogeneity of SOC values, thereby increasing the efficiency and reliability of the battery.

7.5 Performance Evaluation and Discussion

Simulations were performed for the Intelligent BMS implementation done with the use of MATLAB/Simulink software. The obtained simulations prove the high efficiency of the developed system at the battery charging and discharging stages. Performance evaluation of the proposed Intelligent BMS was conducted with regard to such criteria as accuracy of battery SOC estimation value, balancing efficiency and overall battery pack behavior.

The hybrid SOC Estimation approach proved to be an effective way to follow the battery SOC value changes throughout the entire simulation period, regardless of whether charging or discharging occurred. Comparison of real battery SOC value and estimated hybrid SOC value proves their coincidence and, therefore, efficient operation of the designed SOC estimation approach. Thanks to the application of Coulomb Counting with Kalman Filter, possible estimation errors could be avoided, leading to the reduction in SOC tracking error.

Simulations related to SOC balancing performance proved that the developed Intelligent Active Balancing algorithm works effectively to ensure efficient equalization of SOC value among the batteries. In case there is no balancing process, differences may be seen between the SOC value at the stage of battery charging and battery discharging. However, thanks to the Single-Inductor Active Balancing Algorithm, it becomes possible to equalise the SOC value.

In the same way that energy balancing was carried out successfully in the simulation of charging through the balancing controller, the difference in SOC was reduced. Similarly, in the discharge phase, the balancing method ensured that SOC differences between the cells were minimized.

Combining the methods of SOC estimation and intelligent active balancing resulted in more effective battery management, less SOC difference, enhanced efficiency of energy usage, and reliability. Therefore, the suggested battery management system will work effectively in managing Li-ion batteries in electric vehicles and energy storage systems.

CONCLUSION AND SUGGESTIONS

8.1 Conclusion

The objective of this thesis is to provide the design and development of BMS with hybrid state of charge (SOC) estimation and single-inductor active cell balancing techniques for lithium-ion battery packs. The designed model of this system has been simulated in MATLAB/ Simulink software to enhance the battery monitoring and balancing processes, as well as its performance.

The hybrid state of charge estimation algorithm combining coulomb counting and Kalman filters to get accurate estimations with low cumulative errors has been suggested. As per simulation results, it has been observed that the state of charge estimations are quite consistent with the actual values during both the charging and discharging processes.

Furthermore, an efficient single-inductor-based active cell balancing technique using adaptive pulse width modulation control technique has been developed. After the balancing of cells, it has been observed that the energy is successfully transferred to the batteries with a lower state of charge due to their homogeneity.

It has been seen through the simulation outcomes that intelligent Battery Management Systems provide accurate SOC estimation, active balancing, power saving, efficient use, and robust performance. The developed system may hence be implemented on the lithium-ion batteries that are employed in electric cars and energy storage devices.

8.2 Future Scope

Although the proposed intelligent Battery Management System demonstrated satisfactory performance in simulation, several improvements can be considered in future work:

- Hardware implementation of the proposed system using a real lithium-ion battery pack and microcontroller platform.
- Integration of wireless Battery Management System (WBMS) communication for remote battery monitoring.
- Development of advanced SOC estimation techniques using Artificial Intelligence and Machine Learning algorithms.

- Extension of the balancing strategy for large-scale battery packs used in electric vehicles and renewable energy storage systems.
- Investigation of thermal behavior and temperature-based battery protection mechanisms.
- Optimization of balancing control algorithms for faster balancing and higher energy efficiency.
- Implementation of real-time fault detection and battery health monitoring techniques.

  These improvements can further enhance the performance, safety, and reliability of lithium-ion Battery Management Systems for future energy storage applications.

REFERENCES

1. Rahimi-Eichi, U. Ojha, F. Baronti, and M.-Y. Chow, "Battery Management System: An Overview of Its Application in the Smart Grid and Electric Vehicles," *IEEE Industrial Electronics Magazine*, vol. 7, no. 2, pp. 4–16, Jun. 2013.
2. K. Liu, K. Li, and Q. Peng, "A Brief Review on Key Technologies in the Battery Management System of Electric Vehicles," *Frontiers of Mechanical Engineering*, vol. 14, no. 1, pp. 47–64, 2019.
3. O. Tremblay, L.-A. Dessaint, and A.-I. Dekkiche, "A Generic Battery Model for the Dynamic Simulation of Hybrid Electric Vehicles," in *Proc. IEEE Vehicle Power and Propulsion Conference*, 2007, pp. 284–289, IEEE.
4. Optimizing Battery Performance using Single-Inductor based Active Cell Balancing Circuit for Lithium-Ion Battery Packs. IEEE Conference Paper, 2023.
5. Analysis of Active Cell Balancing Topologies with Electrical Cell Modeling Techniques, IEEE Conference/Journal Paper, 2022.
6. Non-linear Kalman Filter Based SOC Estimation of a Lithium-ion Battery Pack Considering Cell Balancing, IEEE Journal Paper, 2022..
7. A Brief Review on Cell Balancing for Li-ion Battery Pack (BMS), International Journal/Conference Paper, 2021.
8. State-of-Charge and Remaining Charge Estimation of Series-Connected Lithium-Ion Batteries for Cell Balancing Scheme. EE/Elsevier Journal Paper, 2021.
9. Efficient Battery Management using Cell Balancing Techniques, International Journal Paper, 2021.
10. H. Bashir, W. Khalid, A. Yaqoob, S. Akhtar, F. Kousar, and W. Sultan, "A Comprehensive Review of Li-ion Battery Cell Balancing Techniques & Implementation of Adaptive Passive Cell Balancing," in *Proc. IEEE International Conference*, 2022.
11. Optimizing Battery Performance – Active and Passive Cell Balancing, International Conference Paper, 2022.
12. Active and Passive Cell Balancing Techniques for Li-Ion Batteries used in EVs, IEEE/International Conference Paper, 2022.
13. Coupled Inductor Design Methodology to Improve Energy Transfer Efficiency in Active Cell Balancing Circuit, IEEE Conference Paper, 2023
14. Simulated Solar Assisted Battery Management System with Fuzzy Temperature Control, International Journal/Conference Paper, 2021.
15. M. S., S. S. Sundar, K. Kumaran, and M. Thirumeni, "Design and Implementation of Battery Management and Wireless Charging in Electric Vehicles Using IoT, International Conference Paper,

2024.

16. S.-J. Na, J.-U. Sim, B.-J. Kim, D.-H. Kwon, and I.-H. Cho, "Design of Bluetooth Communication-Based Wireless Battery Management System for Electric Vehicles," *IEEE Access*, vol. 12, pp. 185946–185958, 2024.
17. P. Bansal and N. PR, "Wireless Battery Management System for Electric Vehicles, IEEE Conference Paper, 2021.
18. F. A. Rincon Vija, S. Cregut, G. Z. Papadopoulos, and N. Montavont, "From Wired to Wireless BMS in Electric Vehicles, IEEE Conference Paper, 2021.
19. F. A. Rincon Vija, S. Cregut, G. Z. Papadopoulos, and N. Montavont, "Enabling Robust Wireless Communication for BMS on Electric Vehicles, IEEE Conference Paper, 2022.
20. Plett, G. L., *Battery Management Systems*, Artech House, 2015.
21. Belmajdoub, N., et al., "State of Charge and State of Health Estimation of Lithium-Ion Batteries," *Materials Today Proceedings*, 2024.
22. Rivera-Barrera, J. P., Muñoz-Galeano, N., & Sarmiento-Maldonado, H., "SoC Estimation for Lithium-ion Batteries: Review and Future Challenges," *Electronics*, vol. 6, no. 4, 2017.
23. Wu, T., et al., "Voltage-SOC Balancing Control Scheme for Series-Connected Lithium-Ion Battery Packs," *Journal of Energy Storage*, 2019.
24. Piller, S., Perrin, M., & Jossen, A., "Methods for State-of-Charge Determination and Their Applications," *Journal of Power Sources*, vol. 96, 2001.
25. Movassagh, K., Raihan, A., Balasingam, B., & Pattipati, K., "A Critical Look at Coulomb Counting Approach for State of Charge Estimation in Batteries," *Energies*, vol. 14, no. 14, 2021.
26. He, H., Xiong, R., & Fan, J., "Evaluation of Lithium-Ion Battery Equivalent Circuit Models for State of Charge Estimation," *Applied Energy*, vol. 88, no. 11, 2011.
27. Zhang, Q., et al., "Coulomb Counting Method Based SOC Estimation of Lithium-Ion Batteries," 2025.
28. Plett, G. L., "Extended Kalman Filtering for Battery Management Systems of LiPB-Based HEV Battery Packs," *Journal of Power Sources*, vol. 134, 2004.
29. Kim, M., et al., "A Review of Cell Balancing Methods for Lithium-Ion Battery Packs," *Electronics*, 2021.
30. Park, H. S., et al., "A Modularized Charge Equalizer Using a Battery Monitoring IC for

Series-Connected Li-Ion Battery Strings," *IEEE Transactions on Industrial Electronics*, 2009.

31. Daowd, M., et al., "Passive and Active Battery Balancing Comparison Based on MATLAB Simulation," *IEEE Vehicle Power and Propulsion Conference*, 2011.
32. Shreasth et al., "A Novel Active Lithium-Ion Cell Balancing Method Based on Intelligent Equalization," *Scientific Reports*, 2025.
33. Goodenough, J. B., & Park, K. S., "The Li-Ion Rechargeable Battery: A Perspective," *Journal of the American Chemical Society*, vol. 135, no. 4, 2013.
34. Hannan, M. A., et al., "Battery Management System for Electric Vehicles: A Review of Its Technology and Application," *Renewable and Sustainable Energy Reviews*, vol. 64, 2016.
35. Rahimi-Eichi, H., et al., "Battery Management System: An Overview of Its Application in Electric Vehicles," *IEEE Industrial Electronics Magazine*, vol. 7, no. 2, 2013.
36. Waag, W., Käbitz, S., & Sauer, D. U., "Experimental Investigation of the Lithium-Ion Battery Impedance Characteristic at Various Conditions and Aging States," *Applied Energy*, vol. 102, 2013.
37. Uno, M., & Kukita, A., "Bidirectional PWM Converter for Cell Voltage Equalizer Using Series Resonant Switched Capacitor," IEEE Transactions on Power Electronics, vol. 30, no. 6, 2015.
38. Lu, L., Han, X., Li, J., Hua, J., & Ouyang, M., "A Review on the Key Issues for Lithium-Ion Battery Management in Electric Vehicles," *Journal of Power Sources*, vol. 226, 2013.
39. Zheng, Y., et al., "A Review of Battery Management Systems for Electric Vehicles," *Energy Reports*, vol. 8, 2022.
40. Jiang, J., et al., "An Intelligent Battery Management System for Electric Vehicle Applications," *Energy*, vol. 133, 2017.
41. Lee, Y. S., & Cheng, M. W., "Intelligent Control Battery Equalization for Series Connected Lithium-Ion Battery Strings," IEEE Transactions on Industrial Electronics, vol. 52, no. 5, 2005.
42. Hu, X., Li, S., & Peng, H., "A Comparative Study of Equivalent Circuit Models for Li-Ion Batteries," *Journal of Power Sources*, vol. 198, 2012.
43. He, H., Xiong, R., & Fan, J., "Evaluation of Lithium-Ion Battery Equivalent Circuit Models for State of Charge Estimation," *Applied Energy*, vol. 88, no. 11, 2011.

LIST OF PUBLICATION

1. M. Verma, D. Kumar, M. Singh, D. Singh and M. Sreejeth, "Performance Analysis of Wireless Communication to Remote Client User of Battery Management System Using HM10 Module," 2026 18th International Conference on Electronics, Computer, and Computation (ICECCO), Kaskelen, Kazakhstan, 2026, pp. 1-5, doi: 10.1109/ICECCO67619.2026.11488809. (**Publised**)