CONTINUOUS POWER GENERATION SYSTEM COMPRISING WIND POWER AND PV HYBRID WITH 100% RENEWABLE ENERGY STORAGE

MAJOR PROJECT-II

SUBMITTED IN PARTIAL FULFILLMENT OF THE REQUIREMENTS FOR THE AWARD OF THE DEGREE

OF

MASTER OF TECHNOLOGY
(POWER SYSTEM)

ABHISHEK YADAV
(2K18/PSY/10)

Under the supervision of

PROF. NARENDRA KUMAR

ELECTRICAL ENGINEERING DEPARTMENT

DELHI TECHNOLOGICAL UNIVERSITY

(Formerly Delhi College of Engineering)

Bawana Road, Delhi-110042

August 2020

CANDIDATE'S DECLARATION

I Abhishek Yadav, Roll No. 2K18/PSY/10 student of M.Tech (Power system), hereby declare that the major project entitled "**CONTINUOUS POWER GENERATION SYSTEM COMPRISING WIND POWER AND PV HYBRID WITH 100% RENEWABLE ENERGY STORAGE**" which is being submitted by me to the Department of Electrical Engineering, Delhi Technological University, Delhi in partial fulfillment of the requirements for the award of the degree of Master of Technology, is original and not copied from any source without proper citation. This work has not previously formed the basis for the award of any or other similar title or recognition.

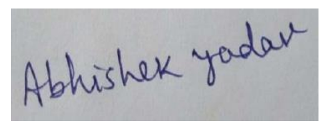

Place: Delhi **ABHISHEK YADAV**

Date:

CERTIFICATE

I hereby certify that the major project entitled "**CONTINUOUS POWER GENERATION SYSTEM COMPRISING WIND POWER AND PV HYBRID WITH 100% RENEWABLE ENERGY STORAGE"** which is submitted by ABHISHEK YADAV, Roll No-2K18/PSY/10 in Electrical Engineering Department, Delhi Technological University, Delhi, in partial fulfillment of the requirement for the award of the degree of Master of Technology (Power System), is a record of the major project-II work carried out by the students under my supervision. To the best of my knowledge this work has not been submitted in part or full for the award of any degree or diploma to this University or elsewhere.

Place: Delhi (PROF.NARENDER KUMAR-I)

Date: SUPERVISOR

ACKNOWLEDGEMENT

I would like to express my gratitude towards all the people who have contributed their precious time and effort to help me without whom it would not have been possible for me to understand and complete the project.

I would like to thank Prof. Narendra Kumar, Department of Electrical Engineering, and my Project guide, for his support, motivation and encouragement throughout the period this work. His readiness for consultation at all times, his educative comments, his concern and assistance even with practical things have been invaluable. The valuable hours of discussion and suggestion that I had with him have undoubtedly helped in supplementing my thoughts in the right direction for attaining the desired objective.

I wish express my love and gratitude to my beloved parents, siblings and friends for their understanding and endless love. Above all thanks to Almighty for blessing and guiding me throughout my life.

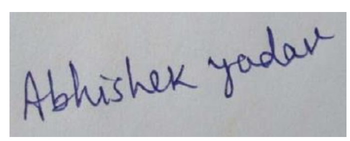

DATE: (**ABHISHEK YADAV)**

(2K18/PSY/10)

TABLE OF CONTENTS

ABSTRACT

The share of renewable resources in energy systems around the world is constantly increasing. The paper examines how renewable energy technology capital costs influence the optimal configuration and energy costs of a solar power system consisting solely of renewables. The HOMER software has been adapted with hydropower and geothermal plants to include and simulate pumped storage. As a result of the available wind, solar and geothermal resources, Ometepe Island, Nicaragua has been chosen as a case study. More importantly, it has an extinguished volcano with a crater lake at its top which can be used as its upper pumped storehouse. When considering geothermal, the results indicate that this technology can serve the system's basic load, decrease the installed capacity required for other resources and lower storage demands and electricity production exceeding. Included is the geothermic option which increases the required size of solar and wind farming by up to 6.5 times the peak power, thereby increasing energy costs and excessive electricity production during the time of other variable resources. The various system configuration results have shown that the economic side of renewable energy production is at least as important as the availability of natural resources.

Keywords: solar power, hybrid systems modeling, wind energy, geothermal-mal energy, software Homer, pumped storage hydropower.

CHAPTER 1

INTRODUCTION

The pillars of electrical systems worldwide are becoming non combustion renewable energy sources (solar, wind, hydro-power and geothermal). In addition to numerous authors [1 -6], the goal of achieving an electricity system entirely based on renewables has also come true in many areas around the world in recent years. Examples of renewable energy penetration in cities, regions, Iceland are as follows: Aspen, Colorado, USA which removed coal-fired plants in 2015 but now has its energy needs covered by hydropower, wind and geothermal photovoltaics [7]. Tokelau Islands, administered through New Zealand, have photovoltaic battery backup systems [8]; the Danish island of Samos has a negative carbon footprint that uses biomass and wind power to supply its cargo through a photovoltaic system that is completely produced using renewable energies in 2016 and 2017, and has been aiming for a carbon neutral environment within this century [9]. Obviously the list is not complete, but the growing population of entirely renewable energy supply communities is new and proving that this situation is possible.

A common idea described in [11] confronts the above examples: variable renewable sources of energy such as wind and solar energy, to an extent that they can make a significant contribution to electricity supplies or serve baseline energy, is unreliable and intermittent. Autonomous power systems with a high degree of renewables need adequate actions to balance energy supply and demand to overcome the intermittent and inventory nature of these sources of energy, in order to maintain the quality of electricity supply by controlling net frequency and voltage. In order to achieve this balance, the combination of disposable technologies and energy storage is one of the most common approaches.

The two non-combustion renewables that are able to generate dispatch able energy are geothermal and hydropower reservoirs. Geothermal energy is not heavily affected through weather like solar, wind or even hydropower with a capacity factor between 45 and 90 percent and can provide a base load and maximum loads. However, the use of geothermal plants in the supply of base loads is generally more economical [12].

A mature and efficient way of storing bulk energy, the pumped hydroelectricity (PSH) is a significant feature that has been identified as a viable option for the integration of VRES into isolated areas and in domestic power grids[13, 14]. One of the main costs associated with the building of reservoirs is hydropower with storage. In particular, PSH costs around 18 percent of the cost of a PSH plant that already has the two storage tanks, which requires two new tanks, and 40% of a system including a new tank [15], per kilowatt hour (kWh). PSH may generally be of different kinds: both storage tanks are man-made (e.g.: PSS plants); the natural lakes connected by canal (e.g.: negotiation of pumped storage plants, Poland); the natural water body is one of the tanks; the second is an artificial tank (e.g.: PCSP), which is the bottom tank; the bottom tank is man-made the lower tank is a water tank. Although PSH plant configurations are many, a favourable ratio of vertical (head) to horizontal distance between reservoirs is the principal factor determining the suitability of the given site for the development of PSH [18]. The sustainability of island and remote communities throughout the world is directly linked with the availability of fuel oil and its rising price. It is a commodity that drives ships and trucks to and from the island, fuel vehicles which enable tourism and mobilization within those areas, and has enabled these communities to produce electricity consistently [19], perhaps the most important thing.

A rich collection of literature is available on hybrid VRES based systems and PSH based on islands. In the last few years we present briefly some of these works. Duić et al. [20] have shown how PSH can be utilized on Porto Santo Island, in order to increase VRES penetration. The techno-economic analyses for wind-driven PSH in El Hierro have been presented by Bueno and Carta [21]. In their follow-up study they examined how the penetration of renewable energies in the Canary Islands could rise with wind-PSH hybrid systems [22]. The operations of the wind-PSH project applied to Greek insole were analysed by Caralis and Zervois[23] and the wind-PSH market potential for self-power systems in Iceland were assessed in the next survey[24]. [25] Operating policies for wind-PSH stations for island grids have been presented by Papaefthimiou et al. The Wind-PSH system for the insular power systems on Karpathos and Kasos Islands was proposed by Katsapragakis et al. [26]. In an economic analysis, Kapsali et al.[27] used the Greek islands as a case-study to analyse the sensibilities of wind-PSH. Ma et al. [29] considered the addition and technical analysis of PV modules for a remote Hong Kong island to the wind-power hybrid system PSH. For wind-PSH stations for insular systems, Papaefthymy and Papathanassiou [29] have presented a perfect seizing method. Ma et al. [30] presented a similar approach to the optimum development of a self-sufficient solar wind power plant. Barreira et al. [31] considered an off stream HSP project as an option in the Santiago Island (Galápagos) for increasing VRES penetration. In order to increase VRES penetration and achieve grid advantages for Cyprus, Tsamaslis et al [32] have shown a hybridizing PV concept.

HOMER (Hybrid Optimization Model for Electric Renewables) was the most widely used software tool in research studies related to hybrid power systems [33]. HOMER can be described as an electronic computer model which contributes to hybrid power systems (PV modules, wind turbines, hydro-electric rivers, battles, generating systems, etc.) being feasible and designed. HOMER is mainly a cost-effective model that models the physical behaviour and lifetime cost of an electricity system to select the best configuration for the system. HOMER can perform three main tasks: simulation, optimisation and analysis of sensitivity. HOMER is restricted by not having features such as PSH and Geothermal that allow for the direct design of renewable technologies. However, the user can use HOMER to evaluate a hybrid power system that takes into account PSH and geothermal choices by using some equivalent representations and considerations as explained in Canales and Belasco [34] and the user support available at the HOMER energy website [35]. Next releases for HOMER or custom versions can include specific modelling elements for these technologies, but the legacy version, which is universal and usable in this trial, does not have these tools.

Ometepe Island was selected as a case study in Nicaragua, Central America for this paper, because it has several interesting features for evaluating the methodology and evaluating the technical viability of a 100 percent RES system for non-combustion: a) a crater lake on top of an extinguished volcano that can be used as the upper reservoir of a PSH plant; Meza et al.'s recent paper [36] also works with the idea of achieving a total supply of renewable energy to the island of Ometepe. The wind and solar energy potentials are examined in relative detail and the energy storage potential in the crater is also considered in the Maderas volcano. Geothermal energy is mentioned, but research and development investments are still required according to the authors. The focus of this work is to examine the renewable resources available, discuss their potential complementarity and compare them with consumption by the population of the island and suggest actions to reduce or optimize energy consumption.

The aim is to evaluate the capital cost of renewable technology in this context, including only non-combustion renewable energies (geothermal, wind, solar, PSH), in order to improve the configuration and costs of electricity of a single energy system. One of the main features of this paper is the following: (a) It shows how the HOMER model simultaneously covers geothermal and PSH power with other VRES (2) the methods and similar data sources here presented can be adapted to other places around the world, particularly in terms of the PSH potential of extinct crater lakes, using similar geographical characteristics. Following this brief introduction, the structure of this paper describes the adopted method and the presentation, and concludes with the main conclusions of the work, of the case study (a hybrid system on the island of Ometepe in Nicaragua).

CHAPTER 2

LITERATURE REVIEW

H. Liu. L. lin, D. Le, and A. A. Chowdhury have proposed Solar photovoltaic systems (PV) have fundamental differences between power generation systems and conventional synchronous generators. They have no inertia and the characteristics and controls of the electronic power inverters are the dominant elements of their dynamics. The effect of increased insertion of solar photovoltaic energy on dynamic power system performance is important to understand. This document examines the impact of solar PV generation with modal analysis and time-domain simulation on the energy system small signal stability. The simulation results demonstrate that, depending on its location and penetration, solar PV generation may have beneficial or harmful effects on small signal stability. If the minor signal stability of solar power integration is negatively affected, it may be necessary to keep critical synchronous generators online or to maintain adequate damping of lower-frequency oscillations.

C. Rodriguez and G. A. J. Amaratunga. have proposed a grid-connected photovoltaic energy mathematical model is presented suitable for stability studies. The electronic power conditioning unit is modeled on the fundamental transmission relationships. This model shows that there are two solutions, one of which is unstable, for a particular power output. Dynamic orbits which visualize potential issues which can occur under disturbances are presented by means of their own value and their own vehicle analysis. Instances in which the voltage in the PV panel collapses, particularly when working near the maximum power point, are carried out by similar simulations.

Rueda, C. A. Juarez, and I. Erlich, have proposed this article examines the use of CWTs in a study of low frequency electromechanical oscillate (LFEO) power system. This article is available in French only. A new approach to use the connections between low frequency system oscillating features and the Morlet CWT system ring down signal for the detection of modal parameter modifications as well as for the modal frequency and damping calculation is being proposed based on a modified Morlet mother-wavelet feature. In addition, a number of guidance are proposed in order to ensure reliable modal identification estimates to select the central frequency and bandwidth parameters, the scaling factor and the translation factor. Applying it to synthetic, simulated and measured signals confirms the efficiency of the approach proposed.

F. Milano, have proposed the core characteristics of the system are altered when alternative energy sources are connected to the utility grid. This is particularly true of intermittent, volatile energy sources such as PV systems. PV power systems have become increasingly competitive in cost-effectiveness in recent years, leading to increased penetration of PV systems, both large and small. The large integration of power systems into the existing power grid can affect the power flow, power quality, and overall stability of the system considerably, and potentially adversely. This study analyzes the impact of the MATLAB-based Power System Analysis Toolbox (PSAT) on the current utilities grid connection of a large-scale photovoltaic power source. This paper reveals a strong method to analyze the effect of a large-scale PV system on power grid stability, which shows that the results of this analysis could harm the system.

B. Tamimi, C. Canizares, and K. Bhattacharya, have proposed Solar photovoltaic generation (SPVG), in its behavior, is defined by the way its active and reactive power output is controlled; reactive power can be directly controlled as a preset or indirect voltage control at the point of common interconnection (PCC). It is also necessary to control the voltage. Two fundamental modelling approaches for an SPVG infinite capacitor are thus considered during current work: continuous reactive power and constant voltage magnitude models. On the basis of these models, studies are presented and discussed for the IEEE 14-bus benchmark system of the effect on the voltage system and angle stability of integrating SPVG into the grid. The analysis is conducted from the transmission system level and from the point of view of the system operator. Therefore, voltage stability studies using PV curves are performed, small-scale stability studies are performed based on a linear system modes own-value analysis and time domain studies are conducted in order to assess total system performance in the event of contingencies. Results and studies show that SPVG does not adversely affect the stability of the system in PV-control mode and can actually improve it.

M.Q. Duong, E. Ogliari, F. Grimaccia, S. Leva, M. Mussetta have proposed high solar and wind energy penetration of the grid system presents a range of network challenges such as grid stability, safety, operation of the systems and the economics of the market. They depend on the weather compared with conventional generation, one of the major problems of solar and wind systems. The balance in load management and generated power is, as we know, very important in the energy system. The extra cost of the operating system with large penetration of renewable energy is reduced if the power supplied from solar and wind is perfectly predictable. As a major contribution to the global development of non-programmable renewable sources, the accurate and reliable renewable-source forecasting system is an important issue. The goal of this study is to describe the advanced hybrid technology used for the development of PV and wind power. The assessment of this study is obtained by comparing different definitions of the forecast error. Moreover, this research has highlighted the significance of the NWP (numerical predictions of weather) values based on meteorological data for solar and wind power in Italy.

G. N. Sava, S. Costinas, N. Golovanov, S. Leva, and M. Q. Duong, have proposed in nearly 50 percent of offshore and onshore wind power plants, the double-fed induction generators (DFIG's). In contrast to fixed speed induction generators, the DFIGs offer advantages. The DFIGs are susceptible to grid tension disruption and require additional protection of an electronic rotor-side power converter, such as crossbar protection. In this paper the most widely studied science literary studies are compared two active crowbar topologies, IGBT with bypass resistor and IGBT corrective device. Matlab / Simulink has implemented a DFIG model with analyzed crowbar protections. The results of the simulation show that both solutions can limit the current of the rotor and the voltage of the dc. But the corrective solution offers better results.

A. G. Pillai, P. Thomas, K. Sreerenjini, S. Baby, T. Joseph, and S. Srecdharan have proposed transient stability is widely acknowledged as an important aspect of electricity system design and upgrade. This paper deals with the modelling of the wind integrated IEEE 14 bus test system and its transient stability analysis. This paper examines the increase in temporary stability by means of a central area control system in a wind power system with a storage system. A range of renewable energy resources is most interested in wind energy, and this requires energy storage, since a wind turbine needs to achieve a smooth output. The system is connected to a battery power storage system that increases the voltage level in weak busses. The combined action of battery storage and zone controller improves the overall system's transient stability. The analysis is performed using the Power System Toolbox (PSAT), a powerful MATLAB power system analyzer toolbox. Two cases, the amended IEEE-14 bus system and the central transverse grid illustrate the evaluation. The addition of the area control improves system stability and thus the performance of the electricity system.

CHAPTER 3

PHOTOVOLTAIC SYSTEM

3.0. Introduction

A solar photovoltaic system is created to provide sun power through photonic cells, including a solar photovoltaic system. It derives of the arranging various devices consisting solar cells for absorbing and transforming solar to current, solar inverters for changing electrical current from DC to AC, cable and other components for installation of a working system. It can also use a solar tracking system to improve the overall performance of the system and include an inclusive battery solution, because prices of storage devices will drop. In essence, the solar array only covers the solar panel group, the obvious component of the photovoltaic system and not every other component, often called the system balance (BOS). PV systems also transform light to electricity directly and should not be confused with other technologies used for heating and cooling, such as concentrated solar energy or solar thermal energy.

PV systems range from small, rooftop-mounted and of several to several dozen kilowatts of capacity to large hundreds of megawatt utility plants. Today, most PV systems can be networked and only a small portion of the market are connected off-grid or standalone. Systems from niche, or environmental emissions. A roof system generates approximately 95% of the net-clean renewable energy for a lifetime of 30 years for its manufacturing .In recent years, prices for PV systems have rapidly declined due to the exponential growth of photovoltaics. They vary, however, according to the market and system size. Costs five-kilowatt US residential systems decreased by around $3.29 per watt in 2014. Cost of up to 110 kilo Watts rooftop systems deceased by $1 in one watt on the highly penetrated German market. Today, sun PV cells cover lower than fourth of the total cost of system, leaving the remaining OS components and lower prices, including its maintenance, allowance, consideration and connection, providing work, and capitalizing.

3.1. MODERN SYSTEMS

The solar radiation is converted to usable electricity by a photovoltaic system. The solar array and the system component balance are included. PV systems can be grouped into several aspects: grid-connected versus stand-alone, buildup versus roll-covered systems, home versus utilizing systems, dispersed versus common systems, building top versus earth mounting devices, transporting versus fixed tile behavior, and good versus fitted systems. PV systems can be categorized as a retrofit. Other distinct features could include micro-inverter versus central inverter systems, crystalline silicone versus thin-film, and Chinese versus European and U.S. modular modules.

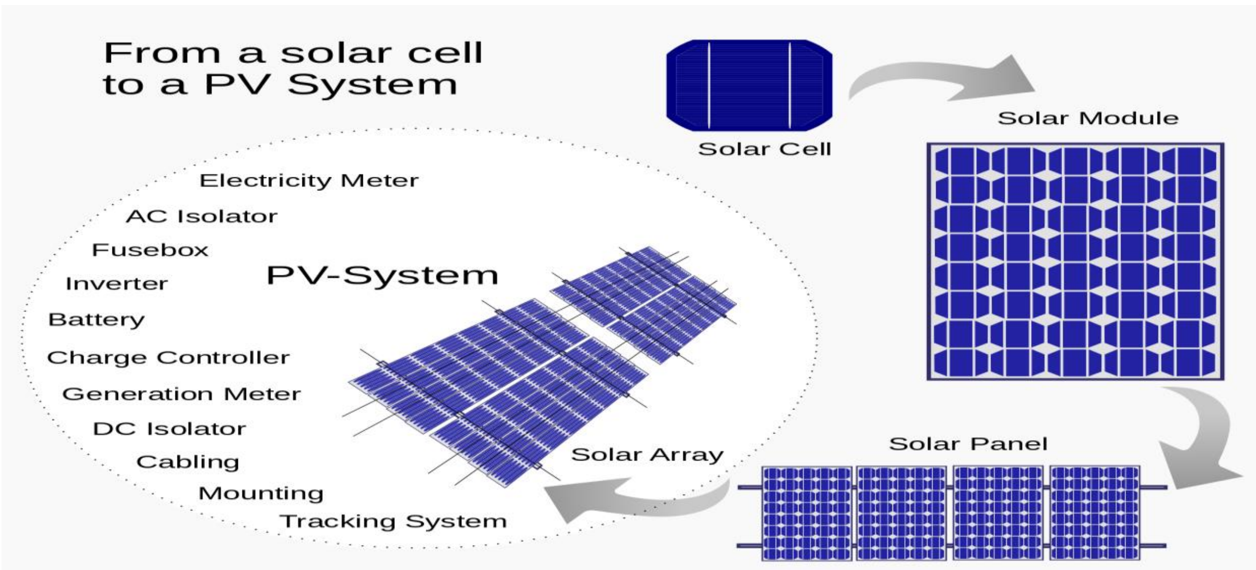

Fig.1. Brief devices used in a PV designed system

The solar radiation is converted to usable electricity by a photovoltaic system. The solar array and the system component balance are included. PV systems can be grouped into several aspects: grid-connected versus stand-alone, buildup versus roll-covered systems, home versus utilizing systems, dispersed versus common systems, building top versus earth mounting devices, transporting versus fixed tile behavior, and good versus fitted systems. PV systems can be categorized as a retrofit. Other distinct features could include micro-inverter versus central inverter systems, crystalline silicone versus thin-film, and Chinese versus European and U.S. modular modules.

Roughly 99% of all solar power systems in Europe and 90% in the USA to a power grid, systems in Austria and South Korea are somewhat more common[6]:11 systems commonly use device of cell storing capacity. In this discussion soon divert with public profit for dispersed capacity of energy and investment in building solutions for small systems increasingly becoming economically viable. A solar range of a critical household photovoltaic system is roof-covered on the top other than built into the roof of the building, because it is much cheaper. Solar power stations of utility scale are mounted on the floor, with a tilted solar panel instead of costly tracking systems. In 90 per cent of the world's solar modules, crystalline silicone is the dominant material, and has it's the market in recent years. In China and Taiwan about is produced, leaving Europe and the United States only 4%. Small rooftop systems and large solar plants both have installed capacities growing rapidly in equal numbers, although the trend towards power systems is remarkable as the focal point of new plants is to sunnier which less against and greater emphasis is on cost-effectiveness.

The cost of photovoltaics is continuously decreasing because of technological advances and increases in manufacturing scale and sophistication. More than a million PV systems worldwide are distributed, largely in Europe, and Germany alone is allocating 1, 4 million systems [1]:5, North America and the United States has 440,000 systems [11]. The efficiency of energy conversion solar module has increased in the past decade from 15 to 20 percent [1]:17 and PV systems have recovered energy needed for their manufacture in abo. The energy recovery time decreases to one years or in exceptionally irrigated places or when using thin-film technology. Such as preferential electricity feed-in charges have also been strongly supported by PV system installations in many countries. The levelled electricity cost from large-scale photovoltaic systems in the creating cells of new locations and remote areas has sources and power connectivity in about 23 nations has been achieved.

World photovoltaic stock is fast achieving the 210 GW position – approximately 45. Currently photovoltaic systems contribute approximately 1 percent to global power generation. China, Japan and the USA are currently the top PV system installers in terms of capacity, whereas half the global bulk up is located in Ukraine, with France and Neither lands providing of domestic energy with solar photovoltaic in Germany. By 2050, that solar power will become the biggest electricity source worldwide, concentrated solar thermal products contributing respectively to world demand.

3.1.1. GRID-CONNECTION

A networked connection is diverted to a (usually the local grid) and flows power to the system. The power can be divided before or after the revenue measurement point by a residential or commercial building. The change is about the derived power consumption is measured with the energy deriving of the customer or only with respect to energy differences (net metering). Network-connected systems vary from domestic power stations to solar (up to 10s of MWp) in size (2–10 kW). This is a decentralized way of generating electricity. The change of the constant into alternating through a rule specific synchronizing tie-in- inverter is necessary to feed the electricity into the grid. The load connected system voltage in kilowatt installations is much intensified as allowed (typically 1100V with the exception of US residential 600V) to reduce ohmic losses. Most modules are generated by 36 volts (60 or 72 Silicone-cell crystalline). Sometimes parallel connection of the modules is required or desirable instead. One so-called a "string."

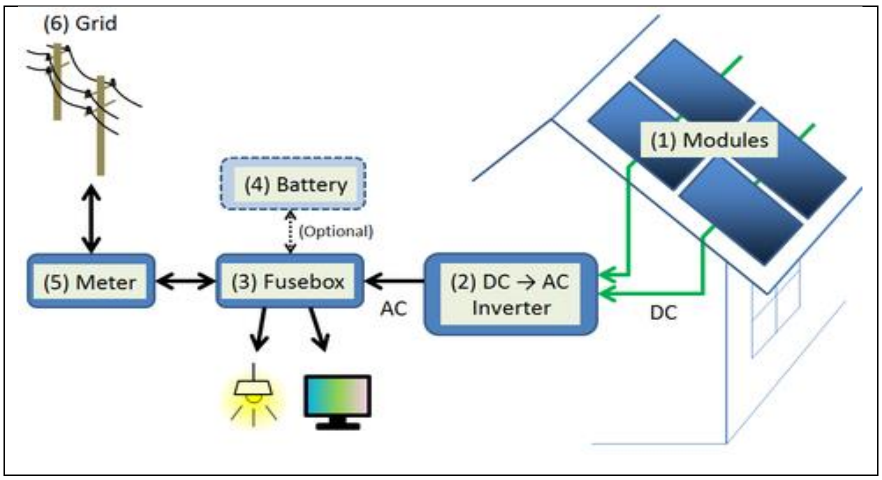

Fig. 2. Connection of the Hybrid system

A networked connection is diverted to a (usually the local grid) and flows power to the system. The power can be divided before or after the revenue measurement point by a residential or commercial building. The change is about the derived power consumption is measured with the energy deriving of the customer or only with respect to energy differences (net metering). Network-connected systems vary from domestic power stations to solar (up to 10s of MWp) in size (2–10 kWp). This

is a decentralized way of generating electricity. The change of the constant into alternating through a rule specific synchronizing tie-in- inverter is necessary to feed the electricity into the grid. The load connected system voltage in kilowatt installations is much intensified as allowed (typically 1100V with the exception of US residential 600V) to reduce ohmic losses. Most modules are generated by 36 volts (60 or 72 Silicone-cell crystalline). Sometimes parallel connection of the modules is required or desirable instead. One so-called a "string."

3.1.2. SYSTEM MEASUREMENT

Generally, is divided into separate market areas: residential rooftops, shopping roofs and utility-scale ground. It’s within the factor between a less kilowatts to a more of megawatts. A common household summary is about 11 kW installed on an inclined tower, are usually installed on low-pitch or flat roofs, at a megawatt level. Although systems on the roof are small and cost per watt higher than large power plants, they are the biggest share in the market. But, especially in the world's "sunbelt," there is a growing trend towards larger power stations.

3.1.3. UTILISATION SCALE

Large power plants or farms are power plants which supply a large number of consumers with energy. Electrical power generated is fed to the central power transmission network (grid connected or grid connected) or to feed into a small electric power grid (hybrid power stations) with one or more domestic power generators. The electricity generated by the island / stationary plant is rarely stored or used directly. In general, PV systems are developed to provide maximum energy efficiency for a particular investment. Some large photovoltaic plants like Solar Star, Solar Park Waldpolenz and Topaz Solar Farm cover 10 or 100 hectares and power outputs of 100 megawatts.

3.1.4 ROOF TOP, REMOTE, AND ACCESSIBLE

System can power even a single device in the form of providing sufficient electricity for AC electricity. Military and civil earth watch satellites, streetlights, buildings, signs, cars, solar tents and electrical aircraft [22] may be equipped with integrated photovoltaic systems for the provision of primary or auxiliary power sources. In 2013, 60 percent of the global installations were covered by rooftop systems. from the rooftop and towards PV systems in utility scale, as new PV systems shift from Europe to sunbelt countries on earth where opposition is less acknowledged.

Usable and remote solar cell systems provide usable capacity for the operation of "remote grid" regardless of utilities connections. Such systems are so common to boat and leisure vehicle retailers[23] and special products[24]][25] As leisure vehicles (RVs) are normally carrying a battery, with normal 11-volt constant power, devices usually work in a way, which is chose as a voltage-charge.

3.1.5. BUILDING-INTEGRATED

Photovoltaic arrays are often used on rooftops in urban and suburban areas to support power use; often the building in which case, in a net meters agreement, the energy generated by the PV array is returned into the utilities. Some utilities like Solvay Electric in Solvay N.Y. are supporting their use of PV panels by using commercial customer rooftops and phone poles. Sun trunks are a set of matrix which, as their way of telling, imitate the appearance of trunk, shadow and can work as for lighting roads during the night.

3.1.6. PERFORMANCE

Revenue uncertainty over time is mainly related assessment of the system's performance. In best cases, there are 4% in certainties regarding year-to-year climate variability, 5% in terms of estimates for solar resources (in horizontal planes), 3% for estimating irradiation in the airfield, 3% for modules, 2% for dirt and soil losses, 1.5% for snow losses and 5% for other mistaking sources. Revenue and efficiency are critical to identify and react to manageable losses. Contracts the builder and the utility buying the generated energy may be included in monitoring array performance. A method for generating "synthetic days and testing using the recently made it high-precision. Local loss mechanisms-such as those caused by snow or the effects on soiling or snow losses of surface coverings (e.g. hydrophobic or hydraulic). (Although snow losses can result in yearly snow losses of 30 percent in harsh snow environments with severe ground interferences [31]) Internet access has further improved energy monitoring and communication. A number of vendors offer dedicated systems. The power data of the module is automatically supplied to solar PV systems using micro inverters (DC to AC conversion at panel level). Some systems can set performance alerts which trigger warnings for telephone / accounts / messages when used to an optimum level. These methods supply the system user and the provider with data. Providers can monitor several installations remotely and see their entire installed base status at a glance.

3.1.7. CPV

Fig.3. Concentrator photovoltaics (CPV)

Photovoltaic concentrated (PVC) and photovoltaic high concentrate (PVH) systems are used to concentrate sunlight on small but very powerful solar cells using optical glasses or curved mirrors. CPV sometimes providing tracker and also to reduce the temperature of systems besides concentrating optics can be more expensive. In particular irradiance are best suited to concentrate rays more than 300 times or more and productivity 25–29% above normal systems. Different designs are commercially available, but not very common, for CPV and HCPV systems. Continued research and development are however under way. CPV is often confused with CSP, which does not use photovoltaics (concentrated solar power). Both technologies favour sites with a lot of sunlight and compete with each other directly.

3.1.8. COMPONENTS

Conversion of power from AC to DC as electricity converters, banking up systems, solar array roofing systems, electrical cables and interconnections, and other component mounts. Any or all renewable energy credit meters, (MPPT), a battery system and a charger, controlling code, sun ray tracker, anemometers or specialized components made to satisfy specialist system proprietors' requirements, may also be included as an optional system balance. In addition, optical lenses or mirrors and sometimes cooling systems are required for a solar hybrid system. The terminologies "solar array" and "PV system," although the solar panel does not include the entire system are often incorrectly used interchangeably. Moreover, "solar panel," which consists of a string of several modules, is usually abbreviated as for "solar module." In a PV system too, the concept of "Solar System" is a common misnomer.

3.2.0. SOLAR ARRAY

Conventional c-Si solar cells are encapsulated in a solar module that is normally wired in series to conserve from weather. The cell is made of a soft, flexible gilt unit, a weathering and fire resistant rod sheet and an aluminum frame at the outer bottom. The module contains an aluminum frame. Often called solar panels, which are powerfully connected and mounted on the support structure. One or many solar panels comprise a solar array. A solar range, or solar range, is a linked solar modules collection. The power that can be provided by a module is rare enough to meet the needs of a house or company, so that the modules are connected in an array. The DC power produced by modules can be converted in alternating current, powering light, motor, and other load, by most PV arrays using an inverter. In order to achieve the desired voltage, the PV modules are normally first connected to series; then the individual strings are supporting the cells in order to convert large power in watts are commonly taken care of solar panels. Typical ratings range from under 100 to more than 400 watts. A brief description of panel uses in power, current or voltage will constitute the rating.

3.2.1. CELL AND PRODUCTIVITY

A common cell used of '140 watts' is received about meter tall. On average, after considering weather and latitude, those cells can be predicted to provide 0.85 kilowatt-hour (kWh) daily for a period of 6 hour per day of sun. Over the past few years, the effectiveness of the annual commercial silicon silicone rapper modules rose from 11% to 17%, while the productivity of the CdTe modules rose by 9% to 13% over the same period. Increased temperature reduces the output and life of the module. It reduces the problem to allow environmental air to flow over and, if practicable, backward. The dissolving time for capital in a PV solar plant varied considerably, and is normally less helpful than calculating refund of capital. The payback period for a PV solar installation is typically 25 years or more. The financial reward period can be considerably shorter with incentives, though it is typically estimated to be between 10 and 20 years.

Fig.4. panels in Canterbury, New Hampshire, United States

Fig.5. Solar modules on the island of Majorca, Spain

Because of a single solar cell's low voltage (typically approx. 0.5 volts), a series of several cells are wired into the "laminate" production (see the copper used in PV systems as well) a weatherproof protective case making a solar or photovoltaic module. The photovoltaic array can then be arranged together. In 2012, consumer solar panels can reach a productivity of up to around 13%, while commonly accessible cells can reach 17%. The group of the Fraunhofer Institute for Solar Energy Systems has established a cell capable of achieving efficiency of 44.7%, making it much possible for scientists to achieve a 50-percent threshold.

3.2.2. SHADING AND DIRT

The electric output from photovoltaic cells is very shading-sensitive. This shading is well known to have its effects. If because of a very tiny part of a cell, shades or arrangements is shadowed, the left over under sunlight, the productivity is less dramatically due to the malfunctioning of the internal circuit. If the produced output by the cells is very less. If the rest of the cells in a string have enough voltage, the current is forced into the cell by disrupting the connection to the shaded part. The voltage of breakdown is between 10 and 30 volts in common cells. The energy, turning it into heat, rather than adding to the power generated by the panel. Since the reverse tension of the shaded cell exceeds the front tension of a cell, the output of various units in the whole device can be absorbed in one shaded cell and volts at a given current level instead of adding 0, 5 volts, so that the power generated by 16 other cells will be absorbed [46], which derives that for a cell system is not affected by shades of various buildings.

3.2.3. INSOLATION

It consists of radiation that is direct, diffuse at the height of the noon at cloudless times on the middle part the output radiation is roughly around a kW / m2,[51] on the lateral surface of earth on an airplane which is perpendicular to the sun's rays. Therefore track the sun every day so that energy collection can be improved. Tracking devices however increase costs and needs care so it is more common for PV arrays to have fixed mounts tilting the array and facing solar noon (approximately to the north, or in the north). The position of tilting from flat to seasonal [52] may vary but should be set to optimize the scope of output for a stand-alone system over the peak electric demand part of a typical year. For maximum annual output energy, this optimum cell position is not the same as the turning position.

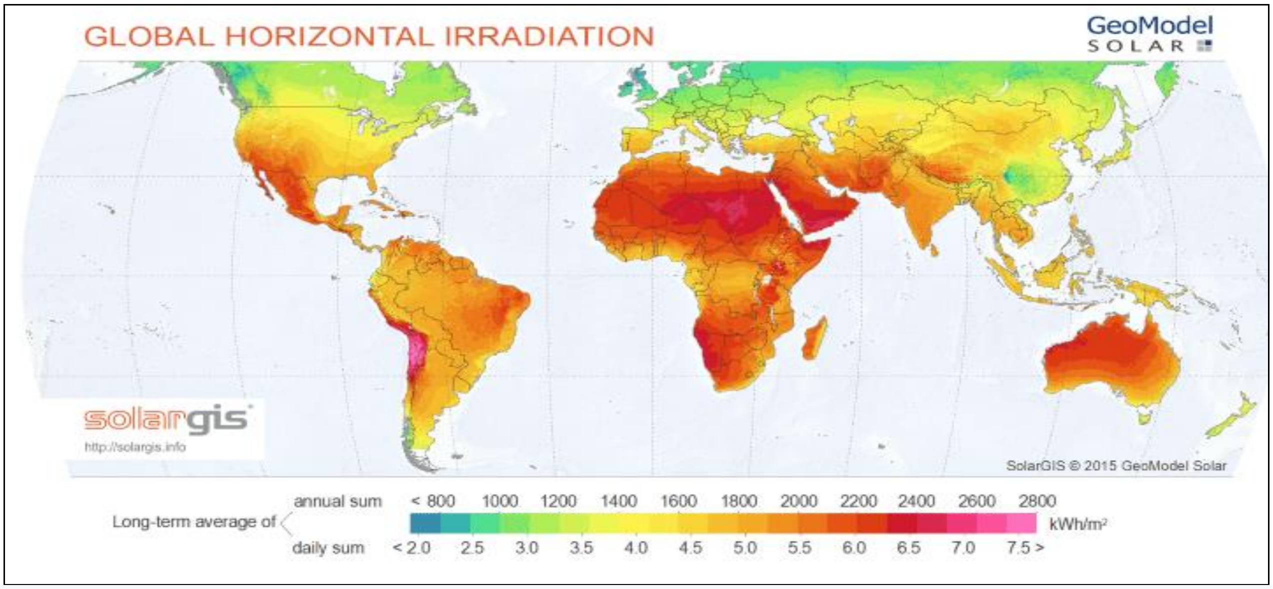

Fig.6.Global horizontal irradiation

It consists of radiation that is direct, diffuse at the height of the noon at cloudless times on the middle part the output radiation is roughly around a kW / m2,[51] on the lateral surface of earth on an airplane which is perpendicular to the sun's rays. Therefore track the sun every day so that energy collection can be improved. Tracking devices however increase costs and needs care so it is more common for PV arrays to have fixed mounts tilting the array and facing solar noon (approximately to the north, or in the north). The position of tilting from flat to seasonal [52] may vary but should be set to optimize the scope of output for a stand-alone system over the peak electric demand part of a typical year. For maximum annual output energy, this optimum cell position is not the same as the turning position.

3.2.4. MOUNTING

Fig.7. an old system with efficiency around 10%.

Cells are put together in rows of certain kinds of assembly system that can be classified as ground mounting, roof mounting or polar mounting. A large rack is installed on the floor in solar parks and the modules are attached to the rack. Many different racks for pitched roofs were developed for buildings. The integrated solutions are used for flat roofs, racks, bags and buildings. Solar panels can be stationary or moving on top of poles, see Trackers below.

3.2.5. CABLING

Due to the outdoor use of the panel cables, photonic devices designed mainly to be withhold UV rays and very hot weather conditions. Many standards specify in part 512 "Photovoltaic Solar (PV) power supply systems" the Ukraine Standard BV 3648 incorporating the mini and photonic cell system regulation and US Standard UK 7643 "Photovoltaic Wire" for the use of cabling in photonic systems, such as IEC60364 of as International Electro technical Commission.

3.2.6. TRACKER

A photonic cell is tilted by a solar tracking system during the day. The device is directed to cover entire to the rays or the most illuminating part of a part of sky which is not clear, depending on the type of tracking system. Increase trackers significantly improve performance in the day time and the late evening time. The entire system output given by a tracking device increases to approximately 18 to 35 percent for one solar cell device and by about 25 percent for a double dimension track smith creating on horizontal earth axis. Tracking is of little or no value in scattered sun rays (i.e. under sky which is scattered with clouds). Due to the very sensitivity to the angle of the sun in most concentrated photovoltaics, tracking systems enable them to produce useful energy over a short period each day. For two main reasons, tracking systems enhance performance. Second, more efficient direct light than angled light is used. The efficiency of solar panels for direct and angled light can be improved by special anti-reflecting coatings, reducing somewhat the benefit of tracks.

Fig.8.Old sun ray tracking device

Trackers and sensors are often seen as optional to optimize performance, instead the sensing devices can achieve a desired performance of up to 35%. Using solar trackers, PV arrays approaching or exceeding one megawatt. Closed accounting is the right amount of covering and the amount of kilowatt-hours available in an area like a square shape, and most people around world are not on the equator, and the sun is setting in the night. The energy gained from tracking systems for large devices can overwhelm the contradictory circumstances (the efficiency can raise it by 20 percent or more). Added tracking maintenance is a significant disadvantage for very large systems. For flat panel and photovoltaic systems of low concentration, tracking is not necessary.

CHAPTER 4

WIND POWER SYSTEM

4.0. WIND POWER

Wind energy simply means in motion kinetic air energy. Air flew on the earth because the surface of the earth was unevenly heated by sunlight. Air flow through wind turbines is used by wind energy to mechanically generate electricity. Wind power is abundant, renewable, widely distributed and clean, as a supplement to fossil fuel, does not produce any production of gases like methane, does not consume much liquid and provides a very limited space. Net environmental impacts are far less difficult than non-renewable energy sources.

We know that the earth's surface has very different land types and lots of water (around 71 percent of the earth's water surface). The soil in the various countries also varies. Sun heats various parts of the earth at various rates, meaning that sun heat does not spread over the earth's surface uniformly. Due to temperature variations in various parts of the world, air flow occurs. This means that, due to the uniform heat spread over the earth's surface, convection currents in the atmosphere wind formation can be clearly visible on the seashore where land and enormous water meet.

The air over the ground is hotter during the day, faster than the air over the water. The warm air over the earth grows denser and thus lighter. The air over the water is less hot than it is heavier on the ground, and thus the air over the water, compared with the air over the ground. Due to its reduced density, the warmer air over the land is higher. When this air gets high, the cooler air flows over the water and there is therefore a wind. So wind power forms during the day in ocean banks. The earth again radiates heat faster than water during the night. Therefore, the land area gets cooler faster than water. The air over the ground gets cooler than the air over the water. Thus, hotter air gets high over the water at night as the density becomes lower. Cooler and heavier air from the ground will occupy this holiday area. So the wind will again, but in the opposite direction compared to the time of day.

Again, in the vicinity of the equator, the atmosphere becomes hotter than in the northern and south poles. Due to this, the winds close to the equator are always close. Because of the flow of wind energy, we call kinetic energy available and can efficiently use it to generate electricity.

Clean energy supply is wind. It has no impact on the atmosphere of the greenhouse. It replaces fossil fuels like coal, oil and natural gas, etc. Although coal, oil and natural gas, etc., are primary fuels for electricity production, their availability is limited. In the whole world, 67% of fossil energy is produced by electricity, 13% by nuclear power and 20% by renewable energy sources, like hydropower, solar energy, wind energy, tidal power, etc. We therefore see the world's dependence on fossil electricity fuel, which is why we concentrate on generating electricity from wind and other renewable energy sources in order to overcome the dependency on fossil fuels. Electricity generation costs with wind energy are relatively low. Once the turbines are installed and maintenance for a long time is not necessary. The wind power generating system takes some land to install, but most of the land can still be farmed or used for livestock production. Therefore, land is not a big problem for wind turbine system generation. Wind turbine is in most cases installed in good height to get enough wind to generate electricity.

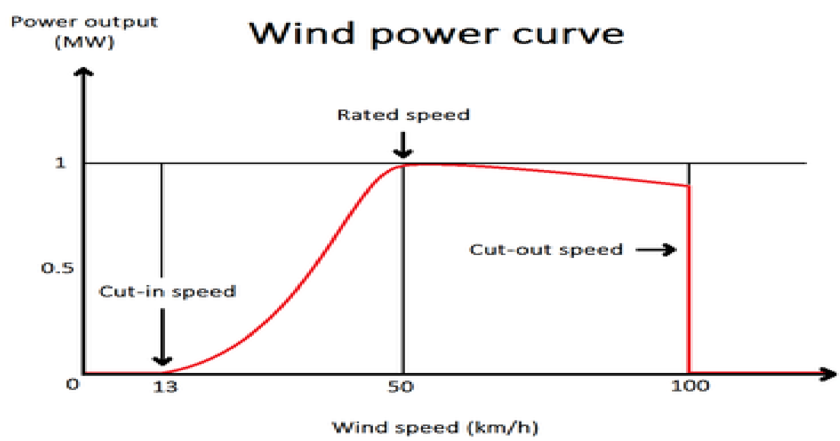

Fig.9.Wind power curve

4.1.0 WIND POWER GENERATION

Fig.10. Stations in Xinjiang, China

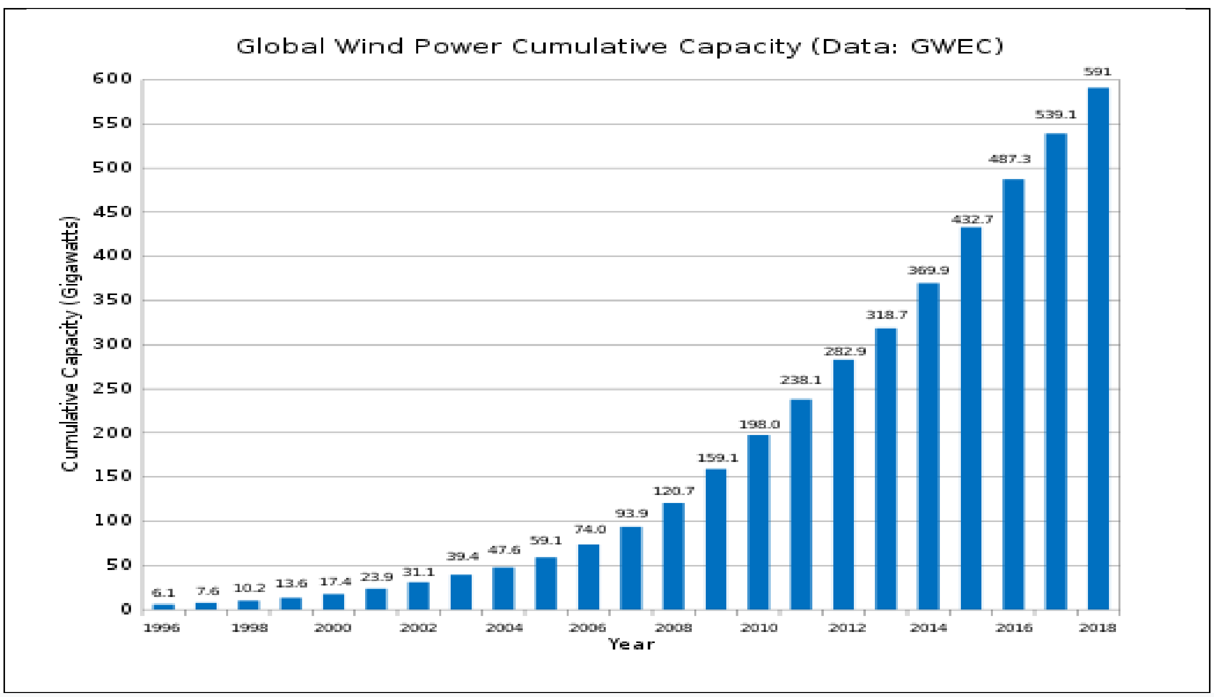

Fig.11.Growth of installed capacity

Wind power from year to year is very consistent, but significantly changes by lesser time values scales. So this is the reason why it used to deliver a reliable supply together with other power sources. With the wind energy proportion growing in a region, the grid has to be upgraded and traditional production can be supplanted lower. In many cases these problems can be overcome by techniques of energy management such as overcapacity, spread turbines, disposable backups, enough power for hydro to neighborhoods, or reducing demand in low wind production. Furthermore, the weather forecast enables the electricity grid to be ready for predictable production changes.

Denmark produces 40 percent of electricity from wind in 2015, and wind power is supplied by wind power in at least 83 countries around the world. The global capacity for wind power grew by 15% to 269.553 MW in 2014. Every year, wind power is also rapidly growing and about 16% of global demand of supply, 12.4% in the European nation.

4.1.1 History

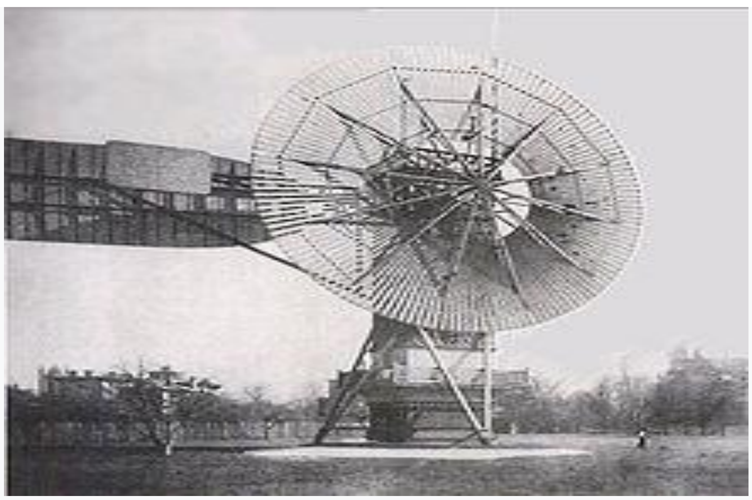

Fig.12. Charles Brush's windmill of 1888, used for generating electric power.

As long as people have put sails into the wind, wind power has been used. Wind turbines have ground grain and pumped water for more than two thousand years. Wind power was widespread and not limited to the banks of high-flow streams or to sources of fuel later on. Wind pumps drained Netherlands polders and wind pumps.

Professor James Blyth of a Anderson College, Glasgow (a forerunner of Strathclyde University) const22 meters in height and very large in feet the devices were built into his cottage at in May Kirk and used as an electric power supply to be one of the areas in household in the international areas to be supplied from the above devices to charge batteries produced by Camille

Alphonse Faure, the French manufacturer, to power the lights in the cottage. Blyth offered the people of Marykirk excess electric energy to light up the street but refused to accept it because they thought it was 'the devil's work.' Even if later he the making of devices turbine for providing power supply to the areas of the household the living near villages and towns with emergency power, the production was a dream captured, because it was not considered that the technology was used.

On the Atlantic in Cleveland, Ohio, in the chilling weather Casdharles E. Bdersh built a larger and heavily engineered machine, which he built at his house and operated between 1886 and 1900. It was built by his engineering firm. The Brush wind turbine had a rotor with a diameter of 17 meters, mounted on a tower of 18 meters. The machine was only rated to 12 kW, although it was large by current standards. The connected dynamo was either used to charge a battery bank or to operate in Brush's laboratory for a lot of lighting elements, too many clutching lights and different devices that can be used.

Wind power found new applications in lighting buildings away from centrally-generated power with the development of electric power. Parallel paths throughout the 20th century have been developed to develop small wind areas and localities having surplus amount of power units which can be connected to the main production unit for very far away village locations use. We are using large wind systems to do their work on all ways, from small stations for battery charging in isolated homes to offshore wind farms, almost gigawatts of which provide national electricity networks with electricity.

4.1.2 Wind farms

A wind farm is a group of wind turbines that produce electricity at the same location. Due to production of big turbine the devices may constitute many generating units, because the area between devices can be made for farming or grazing of wild animals. Gansu Wind Farm, has been found to be providing it and has several thousand turbines and is the world's largest wind farm. There can also be an offshore wind farm. Nearly every major wind turbine has the same design — a wind turbine horizontal axis with an upwind rotor of 3 blades on a nacelle above a tall tubular tower. On a wind farm, a medium voltage (often 34, 5 kV), a power collection system and the communication network are interconnected with individual turbines. The distance that is between the installed devices on a well maintained system that is the need of hours and is generally 7D (7 tons of rotor wind turbine diameter). At the substation, the voltage with a transformer to connect to the power transmission system is increased by the medium voltage electric current.

4.1.3 Device maintenance and overall performance

Production engines that is used in majority of devices need the inductive power to excite the production devices mainly use a large power-factor correction condenser banks. Different types of wind turbine generators act differently during grid disturbances, which means that a new wind farm needs extensive modeling to ensure predictable, steady conduct during system failures of dynamic electromechanical characteristics. In particular, unlike steam or hydro-turbine-driven synchronous generators, induction generators cannot support system voltage during faults.

These generators are no longer used in modern turbines today. In contrast, the majority of turbines now use different variations of rotations with a bank of converters designed for that specific purpose between the generation and the production system that is capable of doing a variety of tasks of limited capabilities and a minimum supply from the production unit. Today what we are using is in our reach partially-scale machines of fixed rod motors with dubbed machines or ac production units with full scale converters (in both permanent and in electricity). Operators will deliver a grid code to a wind farm developer to specify the interconnection requirements of the providing unit. This includes the phase difference between voltage and current, frequency to be in a regulatory fashion of production system not in a working condition.

4.1.4 Production in remote areas

Wind Float operated at the desired power capability ranging between 3MW offshored from Póvdsdoa de a Varzidsdsm, Portugal, and is one of the largest, working device that is being used (the one which is used without any additional supporting units). Production in remote areas means the designing of new devices for the generation of electricity in a big water systems. The winds are higher and stronger and can have a less esthetical impact on the countryside than on soil projects at these locations. The building and maintenance costs are however substantially higher.

Vestas and Siemens are the leading offshore wind turbine suppliers. The major offshore operators are DONG Energy, Vattenfall and E.ON. 2.16GW of production in remote areas, mainly in Northern pacific, was active in October 2010. BTM Consult states that by the end of 2014 there will be over 16 GW of additional capacity installed and the two leading markets, the UK and Germany, will be. A global outdoor wind power capacity of 75 GW, with significant contribution from China and the USA, is expected to reach in 2020. UK investment in wind energy offshore resulted in a rapid decrease between 2012 and 2017 in coal consumption as an energy source, because of lower indices in the use of household appliances in the coming time and therefore the demand of wind turbines has increased a lot. In the past few years the generating units have produced large amount of power that can provide supply to a large number of households. The London Array is the world's largest offshore wind farm with a lots of MW units.

4.1.5. Collection and transmission network

In a wind farm, the power generation system and communication networks of single devices are joined to a system with desired voltage range (normally 33 kV). At the substation, the voltage with a transformer to connect to the power transmission system is increased by the medium voltage electric current. To transfer the generated power to (usually remote) markets, a transmission line is required. A submarine cable may be needed for an offshore station. Building a new wind power line can be too expensive for a big production system singly fended units can benefit from the lines installed for conventional power generation.

The need to develop new transmission links for production obtained from the generating units, mostly in the local an far away areas having lower residents at the mid-range of the nation due to availability of farms, to larger consumption units, as because of areas on coastlines where larger number of people are residing, is regarded as the major challenges for wind power grid integration in the USA at present. In remote areas the current transmission lines were not designed to transport large quantities of energy. [54] The losses associated with power transmission are increasing with more power lines, more turning points of reduction in power are exacerbated at lower lengths and new modes of losses no longer negligible as the length is increased, as the distance at new locations is increased to a level that is not predicted as far as production units are concerned but it totally depends on the problem to tackle ways of communication[42]. The States with low power rates discourage multi-state power transmission projects, fearing providing the farms at a much lower unit rate that is expected to be of the far scalable rates. The production unit had authority given the Energy Division 2005 to approve projects that states refused to implement, but the Senate said that the Department is overly aggressive following an attempt to use this authority. One of the disruptions obtained because of the production units to transmit a new farm is less than generating capacities, mainly as renewable power supply lines can only meet minimum requirements by federal utilities. These are important issues that must be solved, since the generation is under threat of low productivity to work as per the desired case and upto a optimum level called as cutting when the transmission capacity when the demand from the loads increase to a very high range as compared to supply from generation units. While this leads to potential renewable energy production not being exploited, the network overload or a reliable service risk are prevented.

4.1.6. Wind energy installation and gain

More than 3 lakhs generation units with an overall platform capacity of 382 GW in 2015 were in operation globally. [58] As of September 2012, the European Union passed 140 GW of nominal plate capacity [56], while in the United States the platform capacity exceeded 65 GW in 2014 and the Chinese network capacity in 2016 increased by 165 GW [59]. Between 2000 and 2006, wind capacity worldwide more than quadrupled and doubled approximately in every three years. The US has pioneered wind farms and has led the world throughout the 1980s and 1990s to install capacity. The capacities installed in Germany in 1997 surpassed the US and were re-acquired in 2008 by the USA. China expanded its wind power plants rapidly in the late 2000s and made the US the world leader in 2010. Eighty-third countries worldwide had commercial use of wind power in 2011.

New records were set in 2014 for the wind power industry – more than 50 GW of new capacity have been set up. Another record break was in the year 2014, with large amount of profit through a smaller number of 22 percent that too producing passage of the 50 GW annual release. Almost half of all new wind turbines were added to Europe and North America outside the traditional markets in 2015. This was mainly due to new buildings in China and India. Figures by the World Wind Energy Council (GWEC) indicate that the total installed wind power capabilities in 2015 increased to more than 63 GW, from 74 GW in 2004 to 4343 GW. The wind energy sector has become, in terms of economic value, the main objective is to forecast the main contributors in the given sector of our interest, reaching amounting to US$ 439 trillion (€296.6 trillion), a jump from a variety of factors that side may be working on the back .

Because of the huge loss in the market sector in 2008-2010 affected the major production units, GWQC anticipates that by the end of the decade the generation capacity will be 800 GW and at the lasting amount of 2052GW. Record low prices for renewables are accompanying the increased commissioning of wind power. Wind onshore in some cases is the cheapest way to generate electricity and costs continue to decrease. The contract prices onshore winds now stand at 30 USD / MWh for the next few years. In the EU, wind power was 44% in 2015, and net fossil fuel capacity decreased in the same period in 2015.

4.1.7. Capacity factor

Because of the variation of the speed that we get the farms annually generates more power than ever before, multiplying by a year's total of hours of the generator nameplate ratings. The actual productivity ratio is called the capacity factor within one year to this theoretical maximum. Typical capacity factors range from 15-50 percent; upper-end values in favorable locations are achieved and are based on improvements in the design of wind turbines. Some locations have online data and can be calculated from the annual output of the capacity factor. For example, over 2012, the German average wind power factor was just below 17,5%, with a total capacities factor of 24% for Scottish wind farms in 2008-2010 between the years 2007 and 2010 (4,4367 GWhr / yr./(28,9 GW / so 24 = 0,1746).

In contrast to fueled generating plants, several parameters affect the capacity factor, including wind variability in the production unit the shape of the motors compared to the area they are covering at all are the turbine. Therefore a new generator with smaller shape and size produces more capacity but generates lower amount of current in high winds (and therefore more loss). Instead, a more proficient generator would cost more, produces a bit of more energy can stop at low wind speed depending on the type. This would aim for an optimal capacity factor of approximately 30 to 45%. A study published in the US in 2008 the Energy Department has noted that as technology improves, the capacity factor of the new wind turbines increases, and plans for further improvements for future power factors. The capacities of new wind turbines were estimated in 2010 by the Department at 45 per cent. During the period 2010-2015 the annual average wind capacity factor for the US has varied from 29.8% to 34%.

In contrast to the overall generation, wind that is going through the parts will cause the power to be produced a little bit more. The going through wind of the power in global electricity production was 4.5 percent in 2016. The maximum level of wind penetration is not generally accepted. The limit will totally rely upon the amount of power being produced by generation units and the way power is being produced, energy storage of the power and the use of the loads in various areas for a particular grid. An interconnected power grid already will include the capacity to generate reserves and transmit equipment to prevent failure. This reserve capacity can also offset the different wind turbines generation. Studies suggest that there are minimal difficulties in integrating 10 % of the total annual electricity consumption. These studies were carried out in locations with wind farms, some energy or hydro-power dispatch able with storage capacity, and demand management interconnected to a wide network area, which allows electricity to be exported if necessary. If necessary. There are few technical limitations beyond the 20 percent level, but the economic consequences become more serious. The loss of big production of wind generation loss in the socio profit level and continue to be explored by electrical quantities.

For different durations a farm production unit can be made to take care of all the accessory that are needed but is frequently cited annually. To achieve 100% annually, long-term storage or significant connections to other systems with substantial storage is required. Wind could supply up to or above 100 percent of current uses on a basis that is economical to all the hours of need or on any other basis, with the provision of either loading it or expensing. The main industry may use a larger amount of power and low utilization times, because depending upon the outputs can lead to a more severe crisis by night. So we can say that such industries could make use of the generation capacity, can also make a pile of the energy that is obtained and a descent percent energy from deriving renewables, of silicone, aluminum, steel, or natural gas and hydrogen. Alterations can also be designed to inculcate additional supply of energy to the units that are deprived of the same, because as using water heater thermostats remotely.

A part of Fijian region also approximately 50 percent of the country's wind energy capacity in Australia. It’s about the first time coal is cut by 26 per cent of the state's electrical power generation by end-2011, led by the prime minister Mike Ryann, champion of climate change. South Australia, with only 7.2% of the population of Australia, had 54% of installed capacity in Australia.

4.1.8. Variability

Wind power generated electricity can vary widely at various timescales: daily, hourly or seasonally. There are also annual variations, but they are not as important. As instant electricity surplus supply and that to be equal to demand need to be well balanced because of that we need production in order to keep the system in working condition, because of this natures it can result into a significant challenges in integrating high production of farm energy in a interconnected network. Interruption of wind energy production and its non-dispatched nature may lead to increased costs of regulation, increase of operating reserves and (at high level of penetration) to increased management of the requirement at present scenario, load disturbance, banking power tricks or HVDC cable networking systems. The wind that is changing with time is very different from radiation that we receive, and wind can generate electricity in the night in case of other plants remaining inactive in the period of demand.

Changes in the consumer demand and floss of other non-renewable generating plants require operational reservoir withstanding to compensate for wind generation variability. Wind power varies and must be replaced by other energy sources during low wind periods. Transmitting networks currently deal with failures of other generating plants, but intermittent power sources such as wind turbines, which can provide their nameplate capacity about 95 % of the time when scheduled to operate, are much more likely than the conventional power plants. The forecasting increase in the variation of utilization of various resources spun energy stations is currently necessary for grid systems with high wind penetration to prevent electrical power loss if the wind is not present. This is less a problem with low wind power penetration.

GE has installed a prototype wind turbine which is equivalent to 1 minute of production with an on-board battery similar to an electric car. Despite its limited capacity, power output is sufficient to ensure that the 15 minute expectation is met, as the battery is used instead of delivering a complete output to eliminate the difference. In some cases, rise in power of forecasting utilization to exhaust wind power between 10% and 20% or 30%. Thus by providing power in needy condition and removing the need for other power stations, the maderas charging unit cost can be recovered.

In Britain 124 separate occasions were present between 2008 and 2010 when the wind output of the nation decreased to a value lower than 3% of the total generation. A wind power analysis from Denmark found that in 2002, their generation unit produced less than 2% of total demand over 44 days. Wind power advocates argue that these low-wind periods can be addressed simply by re-starting or interconnecting existing HVDC power stations. The application of wind power may be limited for electric networks with very less efficient and low power thermal stations and because links to hydroelectricity systems. According to a study published in the Journal of APM, in 2008, 15 or more wind farms can connect up, on average, 33% (i.e. about eight percent of the overall naming plate capacity) of the total generated energy as a reliable electric baseload that can be used to manage peak loads, provided minimum requirements are met in respect of applied meteorology and climatic technologies.

On the other hand, wind power generation can surpass all other electricity sources in one country on particularly windy days even with 17% penetration. In Spain the highest percentage of electricity generation until that time reached 62.46% of total demand during the time of around the year of 2013. Farm energy generated over 80 hours of 110 percent of the country's power in Denmark, which was penetrating by 30 percent in 2013, peaking at 2 am on 28 October at 122 percent of the country's demand.

Table 1. Increase in system operation costs, Euros per MWh, for 10% & 20% wind share[7]

Region	**15%**	**22%**
UK	3.5	4.2
Sweden	0.6	0.9
Ukraine	0.2	1.2
Fiji	0.4	0.2

The coming Environmental departments for 2006 gifted intermittence management prize for the various regions as shown in the table and also of the variable nature of the cost, according to the share of wind power in the total capacity of several countries. A lot of publications that were published in past years generally view that wind combinations has to be taken into account and it should also not affect the system performance, by adding 15% to the operating reserve. The additional costs can be quantified, which are modest.

Permutation of many units that are found led to diversification by area, shape and size, the different methods of remembering of these variables with adaptable sources, variable power devices that can take care of load shedding in critical conditions can create an energy unit capable of meeting energy supply requirements reliably. In the real world, integration of ever higher renewables is shown gracefully.

In 2009, eight U.S. and three European governments published a "credible and firm technique limit to wind energy supplied by electrical grids" in the leading editorial journal of electrical engineers. Indeed, neither the Eastern and West U.S. regions nor the Internationals Energy agent (International Energy Agency) found significant costs or technical barriers to reliably integrate renewable supplies up to 30% variable in the grid, and in some studies much more.

Power is generally wind complementary. Areas with variable wind densities tend to develop a different environment that has a variable nature in itself on a daily or weekly scales, while the other areas of intermittent nature to be windy and not a clear weather is observed. Solar energy peaks in summer at seasonal timescales, while wind becomes variables in very different seasons depending upon its speed it provides the speed in many areas. Therefore the seasonal change in wind and solar energy tends to somewhat cancel one another. A combined energy plant links Solar , wind, biogas and hydro-storage to supply load-following power every clock throughout the year from entirely renewable sources was tested by the University of Kassel 's Institute for Solar Energy Supply Technology in 2007.

Predictability

Wind power forecasting procedures are used, but for short-term operations the predictability of a specific wind farm is low. There is 80% probability of getting a desired value for the given condition of wind speed is a tedious task and at a higher risk of observation chance of changing 20% or more in five hours for any specific generator. However, Graham Sinden (2009) studies show that variations in thousands of wind turbines at various sites and wind regimes are in practice smoothed. The correlation between wind speeds measured at such locations decreases as the distance between sites increases.

As more turbines are connected across larger and larger areas, the average power output is therefore less variable and better predictable, while the output from a given turbine can vary considerably and rapidly, as local winds vary. Because wind turbines have hardly any effect on overall power failures, wind power is hardly ever faulty, a variety of other plants are dispersed and are mainly focused for generation only wind power units can suffer major unpredictable failures even when far less variable.

4.1.9. Energy storage

A wide pumped-storage power storage reservoir is located at the Sir Adam Beck Generating Complex in Niagara Falls, Canada. Over time, excess electrical grid power is used during low electrical demand so that it can provide a wide range of power and also sustain the smaller units which are power deprived. The wind is in case supplemented very well by conventional hydropower. If the wind blows, hydropower plants in the vicinity can amount to invest in other sources temporarily. Even if the generating plants fail to operate, they can quickly increase production to compensate if they have the capacity for generation. This provides even overall electricity and almost no energy loss and doesn't use water anymore.

Alternatively, where an appropriate water head is maintained at a constant level even the wind is of variable nature in various power plants and release the same amount as and when needed by different loads of varying capacity and heat storage, would be able to store high-wind power and release it when required. The wind penetration level depends on the storage type – a low penetration requires daily storage and long and short penetration – for a longer duration of time. The available power boosts the transfer capability of the wind farms, as higher cost generation can be shifted during periods of high demand. The possible income from this arbitration can compensate storage costs and losses in other nations, for example, the 1.8 GW pumped-storage facility of Dinodrwig evades peaks in electricity demand and provides basic loads with a more effective operation of their systems. Storing water from the well in power systems with high installation cost are only about 75% effectible and can save both fuel and full electricity generation costs due to the amount of running such plants is a bit lower as compared to that of other plants.

Speak wind speeds may not correspond to high electricity demand in particular geographical regions. For example, the hot days in the summer may, because the use of air conditioning, be low in the United States of California and Texas, and there may be high electricity demand. In order to cut demand for electricity over the summer months by increasing air conditioning efficiency to 70 percent by subsidizing the purchase by its customizes of geothermal heat pumps [118], a changeover to other methods of production would be more suited to the requirements and power supply in areas having a variable nature of climate and also too far from grid system. It may be more helpful to interconnect largely scattered areas with a "super grid" HVDC in future. In the U.S., it is estimated that upgrading to a planned or potential renewable energy transmission system would cost at least US $60 billion while the company would value added wind energy more than this.

Germany has a wind and solar power that can surpass day-to-day demand, and exports peak power to its neighbors have been around a trillion economy by 2013.Providing a more efficient solution to the given problem is to install a storage capacity of 30 days that can provide 80 percent of the demand needed to obtain most of the energy of Europe from other farms and other units consisting of cells. Just as the United States is required to conserve the fossil fuels reserved for several days, it can be expected, rather than expecting their neighbors to use their energy meters, that the countries will provide electric power storage.

4.2.0. Production, reserve and transmission of energy

The amount of available units is calculated by measuring the availability of the resources wind power-distinguished plants while maintaining the same level of system safety. Wind energy production in the US prevented a large amount of reserve in 2015, reducing harmful gases production and life threats billion of the economy in public health, according to the American Wind Energy Association.

Energy Return on Energy Invested, which was designed to construct a wind farm divided into the overall wind energy production, is of different nature in its own on average. The advanced techniques to add to the existing plants is therefore typically approximately about a year.

In some areas of Europe in the mid-2000s and around the same time in the US, wind turbines reached grid parity (the point at which the cost of wind power matches traditional sources). Fallen prices still lower the leveled cost and in 2010, a lot of units used was suggested and reached the behavior of plants in the US in 2015 because of the larger amount of power that is needed in these areas.

4.2.1. Overall performance

A convoy of turbine blade through Eden field, United Kingdom. (1999). Even bigger and wider blades are being under plan and are being produced in order to overcome the cost of communication and much more. Capital-intensive the farms, however, are considered as economical. Therefore, cost of production from these units is considered as one of the good alternatives. When a plant is built the cost of the overall unit increases to a level as far as possible to be controlled.

As per the expectations of the farms for each plant must include the area covered, averaged uses over a wide range of fluctuations in any manner that is observable over the intended useful life of the equipment, of the building of a turbine and of the t, bonds borrowed, return on investors, depending upon various factors, the amount being invested by the government to meet the demands of the consumer. Estimates of energy costs are heavily dependent on these assumptions, so the cost figures published can differ considerably. In 2004, wind energy cost one-fifth of its cost in the 80s and some expected to continue downward as larger, mass-produced multi-megawatt turbines. In 2012 wind turbine capital costs were significantly lower than in 2008–2010, but still higher than in 2002. A 2011 U.S. Wind Energy Association report states, "Wind costs have recently decreased by 5 to 6 cents per kilo show in the last two years various factors are affecting the total cost of the plants and therefore they are changing with time in the world market of energy. The United States is currently building a lot of units in new installed capacity, more than doubling in 2010. 35% of all new electricity generation constructed in the United States since 2005 is generated from wind and over new combined gas and coal plants as power suppliers become increasingly attracted to the wind as a convenient hedge against unpredictable price shifts.

An average on-shore wind generating cost of various components and devices used in different regions of the belt depending upon the power availability is shown in a report of the British Wind Energy Assembly. The estimation of the uses defined by it and in case of production in 2007 is five to six per cent higher than that of new coal and natural gas power generation in the US. The estimated wind costs are 55, 80 Dollar per MWh, the estimated cost is 53, 10 Dollar per MWh and 52-50 Dollar. A government study in the UK in 2011 produced similar comparative results with natural gas. Wind turbine power can already be cheaper than nuclear or fossil power plants in 2011; wind energy is expected to be the cheapest form of energy production in the future. Even when subjected, the existence of wind energy, to minimize the cost of production of the various units combined together in peak plants can decrease the costs to consumers (€ 5 billion / yr. in Germany).

A 2012 European Union study shows that, if subsidies and externalities are disregarded, the cost of onshore wind power resembles coal. There are some of the lowest external costs for wind power. Bloomberg New Energy Finance (BNEF), in February 2013, reported that electricity generation from wind farms was less expensive than new coal or baseload gas plants. Their model in Australia for the economical use of the plants and thereby deriving the desired amount of power that is needed by the plants (as of current Australia's carbon pricing system). The models also show that "even without the carbon price, the wind is 14% cheaper than new coal and 18% cheaper than new gas," which is the most costly means of reducing economic emissions. The "reputable damage from emissions-intensive investments" in new charcoal instantaneous plants is partly due to the high cost of lending. The importance of the farms gases fired installations is because of many reasons one being the overuse to the impact on various distributors of the system "export market." Coal production costs built in the '60s and ' 70s' are, due to depreciation, having a unit that comprise of lesser values of components. BNEF calculated 2015 LCOE prices for MWh of new power plants (except carbon cost): 85 dollars for onshore wind of the overall capacity for offshore, , for coal in various nations, 82-150 dollars for other nations, 70-100. In 2014 BTEF calculated prices for MWh. The unsubsidized LCOE costs, depending on region were found in a 2014 study between $37–81. In a 2014 US DOE report, wind power prices had decreased to record lows of $23.5 / MWh in some instances, the purchase agreement for power.

The costs decreased with the improvement of wind turbine technology. A variable range of different sizes of blades, and building units of larger size that has a wide range and are now available. In the US for example in early 2014, the wind industry could produce more power at lower cost through the use of larger wind turbines with longer blades, which captured faster winds at higher elevations. Capital of wind energy and maintenance costs have been reduced further. So it has created a bunch of new pillars, and now Indianan, Michigan and Other nations are able to compete with conventional fossil fuels like coal with wind turbines that have been constructed bigger units up to 300 feet from the ground level. In some cases economically reduced have decreased to about a lower range of prices for an hour and the wind power supply in its portfolio has increased, stating that this are the most valuable changes that are being provided till now .

A lot of custom plans are aimed at reducing the use of more units of offshore electricity. One example is a joint project with nine offshore wind developers, Carbon Trust Offshore Wind Accelerator, which is intended to reduce various units in the area where wind costs by decreased percentage in the coming years. So many countries are moving towards on a scale could reduce offshore wind costs by 25% until 2020.[150] Former CTO Hendrik Stirtesdal at ABB Wind Power said that, compared with other sources of renewables and fossil fuel, offshoot energy would being one of the most costly and comparable solution provider in many countries by 2025. At that time, the cost for on-shore and offshore winds was calculated at EUR 33 / MWh.

Various publications on the 50 per cent lowering down the use of farms costs by 2040 was released by the Energy Department 's National Renews Energy Laboratory (NREL) in August 2017. In wind turbine design, materials and controls, the NREL is expected to achieve progress and improve performance, reducing costs. It has been shown in various cases that the cost savings are leads to a variable nature by 2040 according to international surveyors. Experts estimate cost reduction In more aggressive cases, up to 40 per cent if further efficiencies are achieved through research and development and technology programed.

Many remote areas usually receive a huge amount per wind turbine annually, on the other hand the poor people keep cultivating or grazing livestock up to the bottom. Shown: Wind Farm of Brazes, Texas. A few of California's 6000 turbines were drilled by tax incentives in the 1980s by Altamont Pass Wind Farman. Wind projects provide local taxes for wind energy projects or payments instead of taxes and boost rural communities' economies by providing wind energy farmers income on the cultivated land by the farmers Wind power in most of the cases we receive a lot of help from the institutions to support their economic growth. The United States energy farms sector provide plenty of opportunities to a lot of company’s activities. Farm power benefits a lot of activities and affirmations there sore being valuable to the mankind and its appeal, or to offset and provide ample of growth to the economy of the country.

For the first ten years, for every unit of energy that is being created by the wind energy system is granted a 1.7 pounds / kWh production tax credit (PEC) for the first ten years; the loan was renewed at 2.3cents per kW in 2013 and began construction in 2013. Instead of receiving the PTC, a 40 percent tax credit can be used. The accelerated depreciation is another tax benefit. Many US states also provide incentives such as property tax exemption, mandatory purchases, and other "green credit" markets. The 2008 Enhanced and Enlarged Energy Act contains extensions to wind loans, consisting of many plants in various Countries of nations like Germany and Japan offer assured grid access (also known as feed-in tariffs) to wind turbine-building incentives, a lot of amount collected by government wind power purchase prices. Typically, these feed-in charges are well above average prices of electricity. In December 2013, the United States Senator Lamar Alexander and other Republican senators argued that "the tax credit for wind energy production should expire at the end of 2013" and that new facilities expires on 1 January 2014.

Secondary market forces also encourage enterprises, although there is a premium price for electricity, to use wind-generated power. Socially responsible manufacturers, for example, pay a premium for subsidizing and building new wind infrastructure to utilities. Firms use wind power and can claim to be making variable nature "green" giving in return. In the United States, the various organization monitors company measure the dependency on these sources of energy loans. In recent years, turbine prices have decreased significantly due to harder amounting larger depths, such as increased energy auction usage and the overuse of the capacity on numerous markets. Vistas is a sector that has 3 megawatts power generation on the main on-shore turbine and has seen prices for its turbines decline from around ER 940.000 per megawatt in late 2016 to around EUR 800.000 per megawatt in the third quarter of 2017, enough to supply electricity to about 4.000 households.

4.2.2. Small-scale wind power

Fig.13. Small vertical wind turbine

A turbine comprising y-axis wind turbine Quiet revolution QR5 Gorlovka at the top of Bristol's Colt don Hall, Britain. It has a nominal plate rating of 4, 5 kW, measuring 4 m in diameter and 7 meters in upward level. Wind turbines with ability to produce a huge amount of power and electricity are referred to as smaller-scale wind power. Wind turbines can be used as an alternative to isolated communities, which could otherwise rely on diesel generators. Individuals can acquire these systems for economic reasons to reduce, eliminate or reduce their dependency on electric power from the grid. Over many decades, wind turbines were used in remote areas for domestic electricity production in conjunction with battery storage.

With reference to the previous year output that we are getting in environment can be found in many nations, which has been covering its roofs by helical wind turbines type Gorlov since 2009. Although they are small in energy production compared to the overall consumption of buildings, they help build 'green' credentials that the 'show people your high-tech boiler' cannot do by receiving direct support from the National Energy Research and Development Authority in New York from some of the projects.

Domestic wind turbines connected to network can use grid power storage, thereby substituting local power to purchased electricity when available. In some jurisdictions the surplus electricity generated by household battery charging devices that are available in the market, thus creating a retails loan for its owners to compensate for their energy costs. [170] Users of many other units of power systems have been changing their methods of reference utilize the wind turbine with the addition of batteries, photovoltaic or diesel. Many units of smaller farms are being connected together, can power various places in the public domain by just analyzing the way they are being used, rods and small apartments considered by government that can deposit charge on a unit of Madera's which replaces the need for farm generation unit.

A study by the Carbon Trust on the advancement of the current technologies being abided by many government organizations and thus providing energy to the needy ones tons of carbon dioxide (Mt CO2) emission savings in a decade of electricity (0.3 per cent of the the total electric power use). This is supposed to be based on the assumption that around 12 pence (US 18 a cents) a kWh would install turbines at costs which are competitive with grid electricity. An energy saving confidence report, prepared in 2005 for the government, found that home power generators of various types could supply between 20% and 30% of electricity consumption in the areas by 2040.

The increased awareness of climate change increases the distribution of renewable resources. Additional tasks, such as active filtering, can include the electronic interfaces needed to connect renewable generation units to the power supply system.

4.2.3. Environmental effects

In comparison with the environmental impacts of fossil fuels, the environmental impact of wind power is relatively small. The IPCC states that wind turbines provide a limited range of motion depending upon the variability of wind in that area, when evaluating the life cycle of global warming potentials in energy resources. The farms have a pretty low unit production potential for losses in the environment that we are getting compared with other low carbon power sources.

Although generation units can cover a wide range, many of the generation units are giving variable power that much is concerned and infrastructure cannot be used. Bird and bat death are reported in wind turbines as other artificial structures exist. Depending on specific circumstances, the role provided by the unit's impact is not always good in many areas. Wildlife fatality prevention and mitigation and peat bog protection affect wind turbine location and operation. There's a bit of noise from wind turbines. It may reach approx. 45 dB, slightly lauder than a refrigerator at a unit square area that is being provided. They are inaudible at a distance of 1.5 km (1 mi). Noise has life and death situation for people in terms of health living that they are being there. There are anecdotal reports. These claims have generally not been endorsed by peer reviewed research.

The U.S. Air Force and Navy expressed concern over the negative impact of large wind turbines near the bases "to the degree to which air traffic controllers are losing aircraft's location.

There are various issues raised on the same and the consequent changes in many areas have been done to the particular in landscapes separated by scenery and patrimony.

4.2.4. Hybrid renewable energy systems

As an independent energy system for the provision of electricity in remote regions, hybrid renewable energy systems (HRES) became popular with advanced technologies for renewable energy and the subsequent increase in petroleum products prices. A hybrid power system usually consists of two or more renewables used to improve the efficiency of the system and the balance of power supply.

Examples

Fuel efficiency

For sake of units, take larger values of loads energy obtained into account and because of non-availability of other resources systems to meet this need to combine many other advances renewables. 30% of a biomass system, 30% of the wind system, and the rest from fuel cells, for example. The combination of many generation units can provide 90% of the energy and load demand, household or a company.

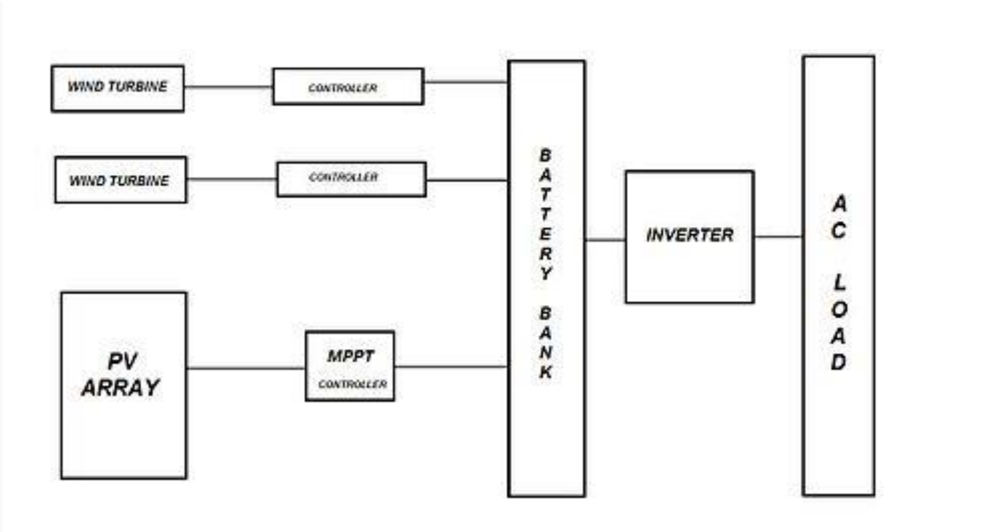

Fig.14. Diagram of hybrid energy system

A solar cell panel, coupled with a wind turbine, is another example of the the combination of the units that are being used [2] in winter, this would generate more energy from the wind turbine while solar panels would achieve maximum output during the summer. The economic and environmental returns of hybrid energy systems often exceed the self-alone wind, solar, geothermic or regenerations systems.

4.2.5. Completely Renewable Idea

A hybrid power plant consisting of these four renewable energy sources may be put into action, through proper use of these resources in a completely controlled manner. A hybrid power plant, consisting of all four renewable energy sources, can be used. Europe-UK hybrid power. Cafes in Europe implements the marine hydro pumped energy storage HVDC transmission via elides. The Carafes project is made of three large marine lakes that produce 1800 GW and ellipse. A share of 1200 GW generates 210 milliards of liters of water-fuel-solar-fuel. Arpan-E, MSE Italy, the Commission-Energy-Cafes Plan for the EU and the advances due to developments in renewable energy technologies as well as a subsequent price increase in petroleum products. A hybrid or hybrid energy system usually consists of two or more renewables, used in combination for improved energy supply efficiency and a higher energy balance.

Above mentioned condition. The costs of the solar panel can be reduced by using glass lenses, fluid heating mirrors, which can rotate the standard wind turbine or other sources. It now raises a question of winter nights or winter cloudy days with very low wind velocities. This is the hydrogen activity. As we are aware, the electrical process can generate hydrogen through the breakage of the water into hydrogen and oxygen, it can be stored. Hydrogen can be used to maintain the biomass reservoir temperature during the winter to produce the best biogas for power generation. As above, biogas is a good source in summer, and the available solar energy will also peak during that period, so that the excess energy can be used in the production of hydrogen and stowed when demand and supply are properly checked and calculated. The turbine is fully operating during the sunny, windy and hot day, as the supply is maximal and this excess power can be used for the hydrogen production process. The electricity consumption is low during the winter, therefore the supply limit is low and reduced. This result is disabled by driving hybrid cars.

CHAPTER 5

METHODOLOGY

5.0. Introduction

Method Design

To predict the feasibilities (FE for feasible and NF for not feasible) of potential HES designs, this research develops the SABP method for a specific situation. Consider a series of tests A1, A2, An whose sensitivities *a*+1 , *a*+2 , . . . , *a*+n and specificities *a*1 , *a*2 , . . . , *a*n are known. For HES configuration, the series of tests will help to identify an optimized solution [35]. Using *q*+i = PR (FE__A1, A2… Ai) and *q*i1 = PR (NF) when Ai shows a positive result, Eqns. (1–4) define the SABP method. Eqn. (5) has the condition when Ai shows a negative result.

$$\theta_1^{+|+} = \Pr\left(FE \middle| A_1 = +\right) = \frac{\Pr(FE)\Pr\left(A_1 = + \middle| FE\right)}{\Pr(FE)\Pr\left(A_1 = + \middle| FE\right) + \Pr(NF)\Pr\left(A_1 = + \middle| NF\right)} \quad \textbf{… (1)}$$

Repeat the application of Bayes' theorem, which yields a general recursive formula for predictability.

$$\theta_i^{+|+} = \frac{\theta_{i-1}^{+} a_i^{+}}{(1-a_i^{-}) + (a_i^{+} + a_i^{-} - 1)\theta_{i-1}^{+}} \quad \textbf{… (2)}$$

If Ai shows a positive result, i = 1, 2… n,

$$\theta_i^{+|-} = \frac{\theta_{i-1}^{+}(1 - a_i^{+})}{(a_i^{-}) - (a_i^{+} + a_i^{-} - 1)\theta_{i-1}^{+}} \quad \textbf{… (3)}$$

If Ai shows a negative result, i = 1, 2… n,

$$\theta_i^{+} = \begin{cases} \theta_i^{+|+} \ if\ A_i = +, i = 1,2,\dots,n \\ \theta_i^{+|-} \ if\ A_i = -, i = 1,2,\dots,n \end{cases}$$

... (4)

If Ai shows a positive result at the ith stage, i = 1, 2…, n

$$\theta_i^{-|-} = \Pr(NF|\ A_i = 0) = \frac{\Pr(NF)\Pr(A_i = -|NF)}{\Pr(NF)\Pr(A_i = -|NF) + (1-\Pr(NF))\Pr(A_i = -|FE)}$$

...(5)

Before the research was conducted, the authors interviewed subject matter experts (SMEs) for the study. The authors developed the survey questions based on the results of a literary review of real-world cases, and empirical studies, together with input from two external project advisers. [42–44].

The authors participated in creating the survey questions and sent the participants the email and mail surveys. The enquiry was confidential. The data was then measured in a multi-stage SABP system process.

5.0.1. SITE SURVEY

Authors interviewed the city's Director of Electrical Operations for data acquisition and the electricity utility portfolio. As a result, Table 1 shows the power content mix of the city and its current means of electricity production, which include: two wind turbines (1.5 MW Vensys model 77) [45], 1.2 MW solar array, eight diesel generators (with 10% extra capacity at any given point in time in case of grid failures), and 3.69 MW operation ownership of the Louisa Coal plant in Muscatine, IA [46].

The city currently owns 0.5% of the plant's ownership, whose nameplate capacity is 738 MW [47].Hence, 0.5% _ 738 MW = 3.69 MW is the ownership for the city. The town receives its remaining electricity from the Midcontinent Independent System Operator Inc. (MISO) electric grid. We buy electricity from the MISO on the day-to-day market for the energy the city cannot generate on site [48]. The day-to-day business is the main area in which salespeople and customers enter into contracts for the power supply the next day. The wind-and-solar resource data from the HOMER Pro database was included in the SABP framework. Emission data is collected in the same way. It calculates the current and optimized potential contents for offering renewable hybrid systems and compares them. The simulation program and the data sets developed provide decision-makers with the following information: electricity production, financial parameters and environmental impacts.

CHAPTER 6

HYBRID SYSTEM MODELING

6.0 Introduction

The modelling of the various sources and joints that make up the HES in this section
As objectively as possible, is portrayed. Such sources provide the electricity available, including the battery, hydroelectricity, wind turbine, PV plant or power converters. Such sources provide the energy supply. In addition, the grid-connected topology enables the connection with the upstream grid, known as a perfect power source or drain, e.g. energy is purchased from the upstream grid to supply existing storage loads and/or loads, otherwise exporting (selling) excess power to the upstream Grid in superfluous circumstances. The available storage space would play an important role in ensuring that peak time charges and energy surplus are responded to during off-peak hours.

6.0.1. Kinetic Battery Model (KiBam)

It is strongly advisable to add a battery pack to the HES so the extra power is retained and the power deficit is supplied for the different operating conditions. The document offers a wide range of models to describe the behavior of various types of batteries under various operating conditions. There are four main groups: electrochemical, stochastic, electric and research models. There are three groups. Authors used this strong and commonly used computational model in their work: the Kinetic Battery Model (KiBam) [49], the same model used for Homer ® and Hibrid2 computer systems.

As shown in Figure 6, KiB am models the total battery capacity in two reservoirs separated by a conductance. A fraction c of the total (nominal) in the available charge reservoir is
Capacity mix (expressed by q1), responsible for the immediate supply of energy to the connected load. The bound charge reservoir has a fraction 1 □ c of the total capacity (expressed by q2) and is responsible for supplying energy exclusively to the available charge reservoir. The rate of charge flow between reservoirs depends on the conductance parameter kilowatt, as well as the difference between the two reservoirs height (h1 □ h2), with h1 = q1/c and h2 = q2/(1 □ c). After periods of battery discharge/charge the reservoirs tend to balance, i.e., h1 = h2.

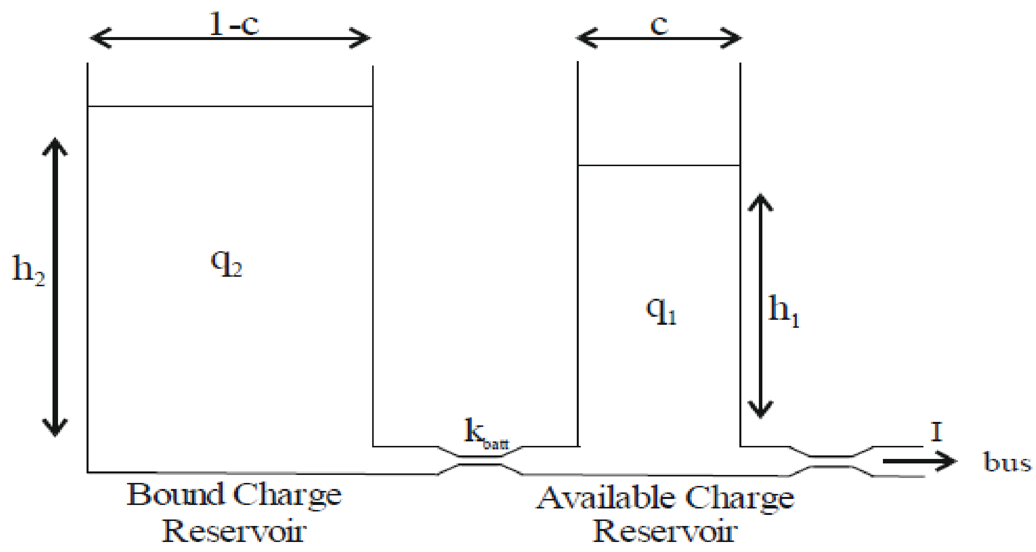

Fig. 15. The two-well kinetic battery model (KiBam)

The formula used is as below

$$\begin{cases} \frac{dq_2}{dt} = k_{\text{batt}}(h_1 - h_2) \\ I = -\frac{dq_1}{dt} - \frac{dq_2}{dt} \end{cases},$$

6.0.2. Pumped-Storage Hydropower

The existence of two reservoirs, one characterizes hydropower generation with pumping. The other downstream and upstream. This concept is simple. Water is pumped upstream during over-the-peak periods at lower energy prices, then when demand is increased (peak periods) and the energy price is higher (more profitable), the stored water is turbine to produce energy. The concept behind this system is simple: Given these characteristics, PSH has a very important load balancing role, since it allows a high penetration of intermittent sources.

$$P_{\text{hydro}} = \mu_{\text{hydro}} \rho_{\text{water}} g h_{\text{net}} Q_{\text{turbine}},$$

$$Q_{\text{pump}} = \mu_{\text{pump}} \frac{P_{\text{pump}}}{\rho_{\text{water}} g h_{\text{net}}},$$

6.0.3. Wind Power Model

Two different curves associated with each wind turbine model represent the conversion cycle of wind energy. The power output of the generator on a certain location depends on the height of the wind speed hub and the turbine speed characteristics [58], and also the speed between the other cut off speeds of the model must be limited. The other is the power efficiency curve that relates the output power of the turbine to the wind, and the output power of the turbine to the wind power available (power factor).

In order to perform the wind speed mapping to turbine's output power upwind, the authors used. The approximated power curves provided by the manufacturers, as depicted in Figure 8, despite. The existence of linear, nonlinear and physical approximated models [1, 51, 58–60]. In this paper, the adopted wind energy conversion system fell on a combination of Bergen BWC Excel-10 and Norwin 24-STALL-150 kW turbines, in order to a total an exact amount of 200 kW of installed capacity.

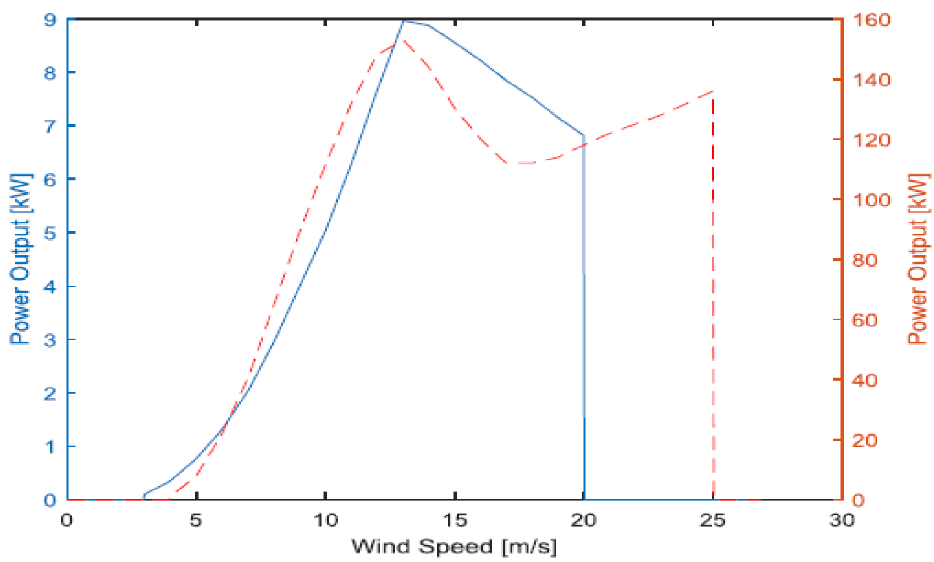

Fig.16. Wind Turbines Power Curves.

Additional details vis-à-vis important features can be seen in Table 4. The wind speed measured by the anemometer at a certain height need to be corrected given the wind shear effect; to this end the Power Law Profile was used, Equation (8), with the power law exponent _ = 1/7:

Table 2. Wind Turbine Modelling:

Parameter	**Value**	Parameter	**Value**
Installed wind capacity	200 KW	α	1/7
Rated Power P1	10 kW	Rated Power P2	150 KW
Cut-in-speed	2.5 m/sec	Cut-in-speed	4 m/sec
Cut-out-speed	20 m/sec	Cut-out-speed	25 m/sec
No. of Turbines	5	No. of turbines	1

CHAPTER 7

7.0.0. SIMULATION AND RESULTS

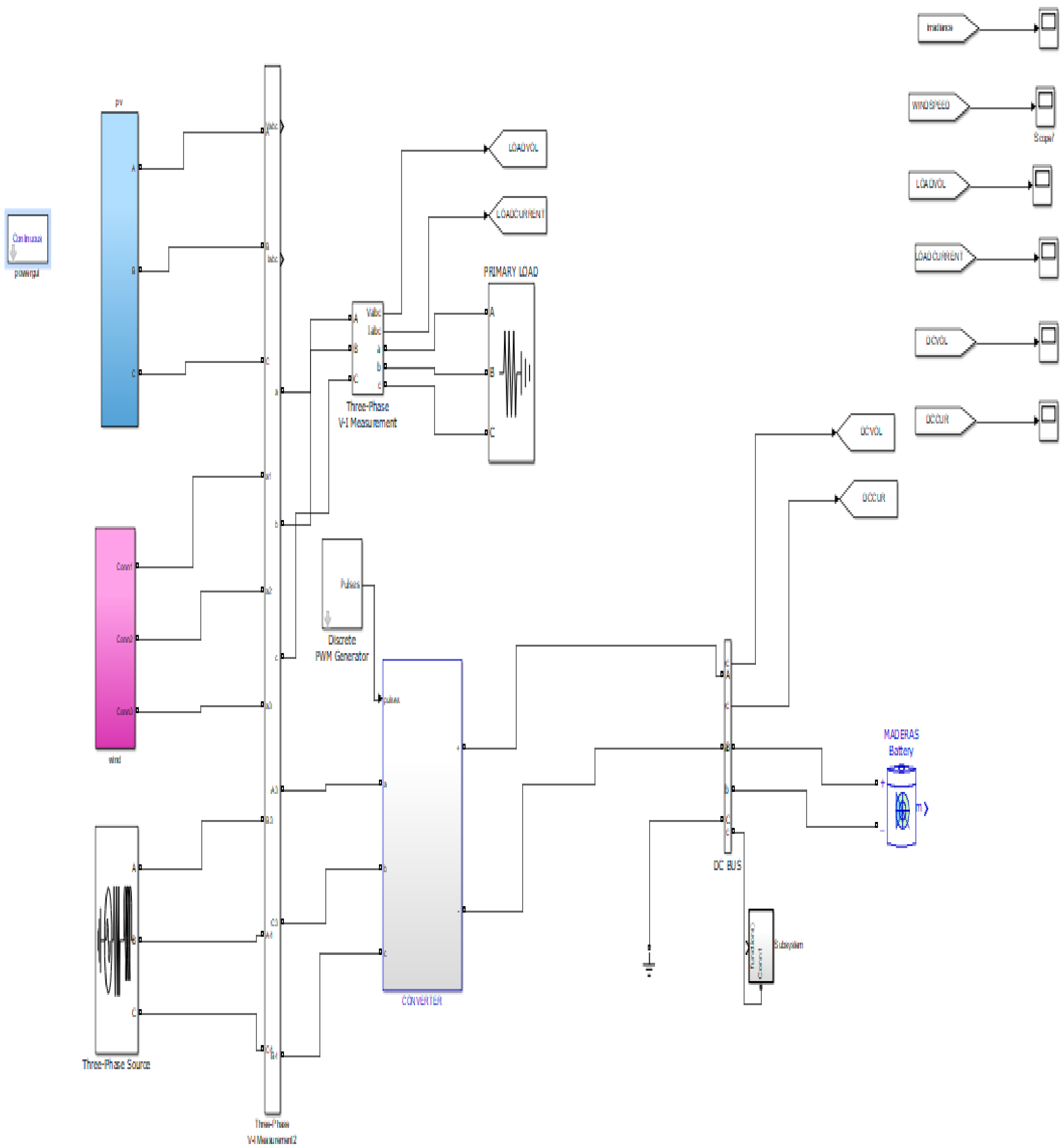

Fig.17. Simulink model of the PV and Wind hybrid system

7.0.1. WIND ENERGY

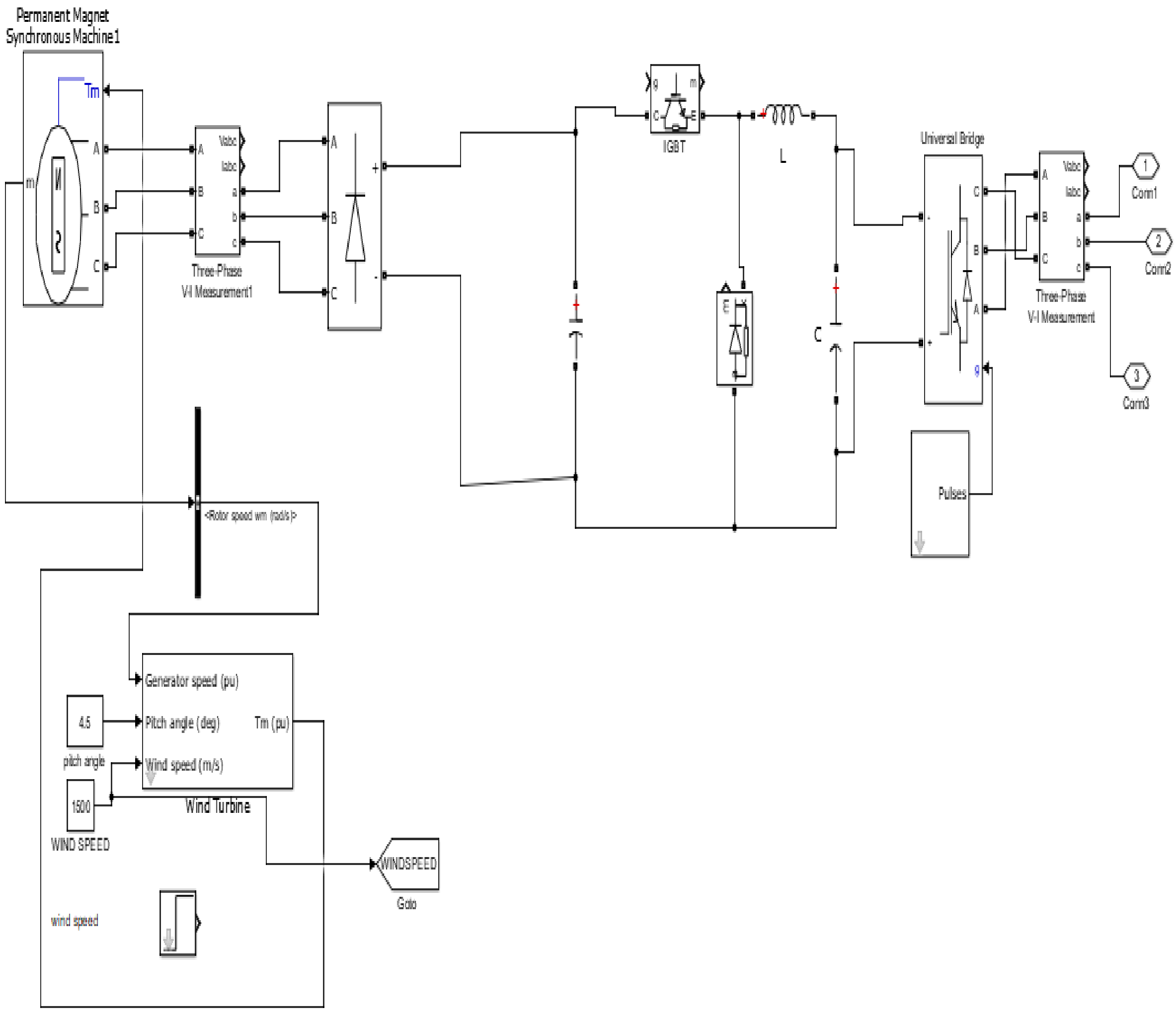

Fig.18. Simulink model of wind power generation unit.

7.0.2. SOLAR IRRADIANCE

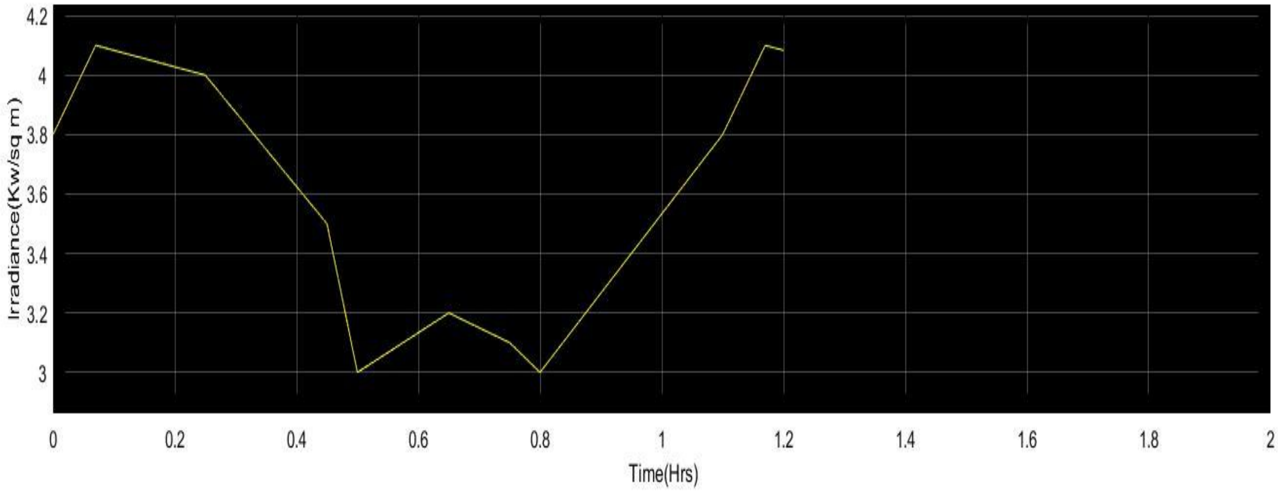

Fig.19. Rated values of available solar irradiance.

7.0.3. AC VOLTAGE

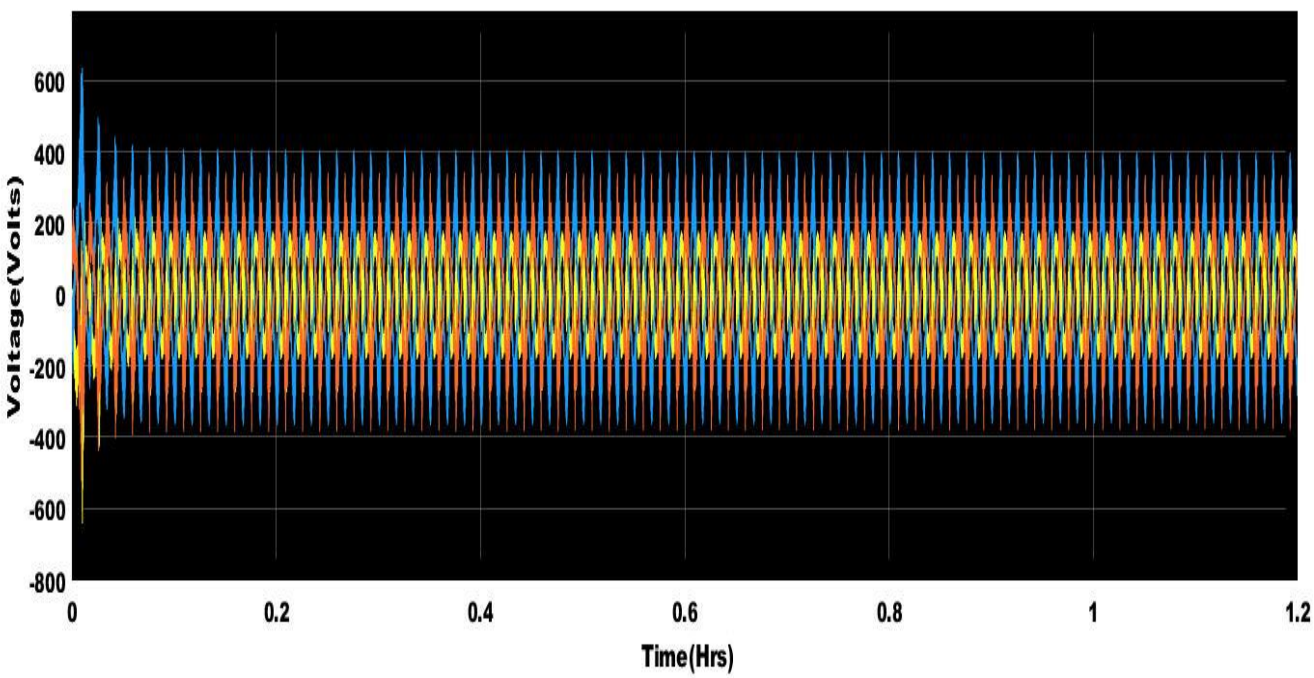

Fig.20. AC output voltage from hybrid system

7.0.4. DC VOLTAGE

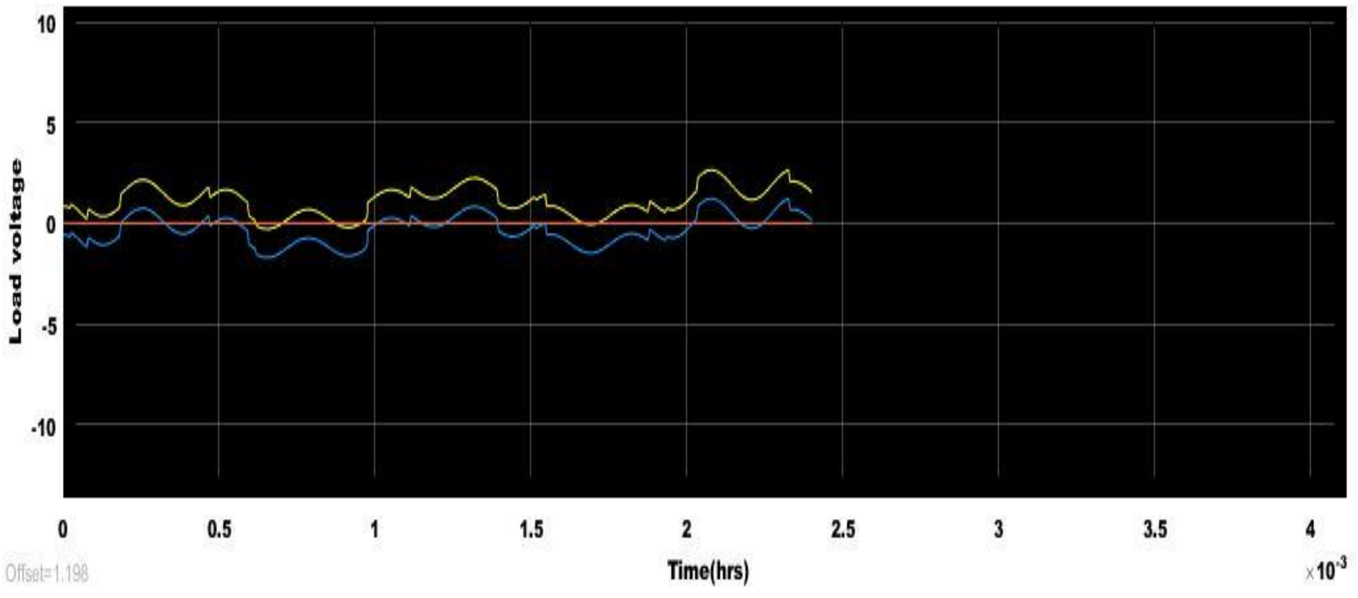

Fig.21. DC output voltage available at battery

7.0.5. DC CURRENT

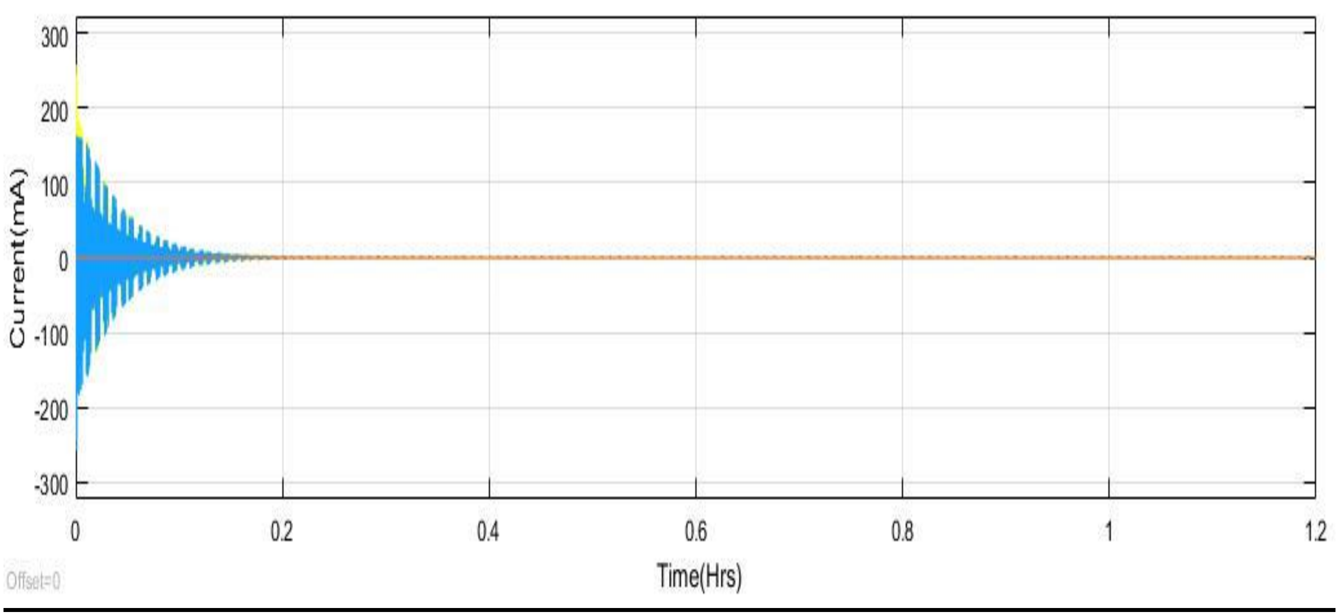

Fig.22. DC current available ta battery terminal

CHAPTER 8

CONCLUSION

The objective of this work was to evaluate how the cost of capital from renewable technologies affect a non-combustion RES (geothermal, wind, solar, PSH) electricity system's optimum configuration and electricity prices. The island of Ometepe, in Nicaragua, was used as a case study particularly since it is located at sweet water, has a required potential and is an interesting option to consider from the Crater Lake Canales and Beluco in top of one of its volcanoes. Depending upon the load profile of a typical village located in the foothill of remote areas, Stand-alone system based on locally renewable energy sources is modelled using Simulink. Different configurations are taken in account and results are presented. Based on the geographical location and the availability of different sources a solution is being presented in context of rural electrification where grid is not present or feasible.

The results obtained are consistent with the general observations in the literature. When considering hybrid system power, the technology is capable of serving the system's basic load, reduces installed capacity of other renewables and lowers storage and excess power generation requirements. This configuration also demonstrated that wind power is a more reliable and efficient source of energy than solar power for the case study. Shift to a 100 % renewable power system without combustion dramatically reduces the carbon footprint of the system's electricity generation. Where there is no geothermal alternative and there is low time complementarity for intermittent renewable resources, the size required of solar and wind farms is immense. As a result COE and excess electricity production are increased.

FUTURE SCOPE

This work can be extended based on the methods and the recommendations of the users at the HOMER Energy website, as outlined and used by Canales and Beluco [34]. The HOMER Energy software Legacy version [37] conducted the simulation, optimization and sensitivity analyses**.** The future work may be carried out with the inclusion of a pumped hydro energy storage scheme along with the designed system to get continuous power in a more reliable manner. Furthermore we can supplementary use PI (proportional Integral controller for load frequency control and blade-pitch control for isolated hybrid system where frequency is not that much consistent. It may be linked to grid via small HVDC line. Further study can be made using optimization methods such as Genetic algorithm, Particle Swarm Optimization etc. to tune the Controller parameters. Future research can be made for control of modern Wind Energy Conversion System (WECS) through the Power electronic control of Synchronous and Induction Generator drives.

REFERENCES

1. Elliston, B.; Diesendorf, M.; MacGill, I. Reliability of 100% renewable electricity supply in the Australian National Electricity Market. In *Towards 100% Renewable Energy*; Uyar, T.S. Ed.; Springer, Switzerland, 2017; p. 297-303.
2. Paris, E.M.; Provost, G.A.; Romano, A.R.; Srivastava, C.; Vencill, T.A.; Whitney, N.S.; Yeskoo, T.W. A 100% wind, water, sunlight (WWS) all-sector energy plan for Washington State. *Renewable energy* **2016**, *86,* 75-88.
3. Diesendorf, M.; Elliston, B. The feasibility of 100% renewable electricity systems: A response to critics. *Renewable and Sustainable Energy Reviews* **2018**, *93,* 318-330.
4. Jacobson, M. Z.; Delucchi, M. A. providing all global energy with wind, water, and solar power, Part I: Technologies, energy resources, quantities and areas of infrastructure, and materials. *Energy Policy* **2011**, *39 (3),* 1154-1169.
5. Mason, I. G.; Page, S. C.; Williamson, A. G. A 100% renewable electricity generation system for New Zealand utilising hydro, wind, geothermal and biomass resources. *Energy Policy* **2010**, *38 (8),* 3973-3984.
6. BačelićMedić, Z.; Ćosić, B.; Duić, N. Sustainability of remote communities: 100% renewable island of Hvar. *Journal of Renewable and Sustainable Energy* **2013**, *5 (4),* 041806.
7. McLaren, J. Reaching 100% Renewable Energy: Lessons-Learned from Aspen, Colorado. In *Urban Energy Transition* (pp. 525-528). Elsevier, **2018**.
8. Weir, T. Renewable energy in the Pacific Islands: Its role and status. *Renewable and Sustainable Energy Reviews* **2018**, *94*, 762-771.
9. Hansen, K., Breyer, C., & Lund, H. Status and Perspectives on 100% Renewable Energy Systems. *Energy* **2019**, *175,* 471-480.
10. Sperling, K. How does a pioneer community energy project succeed in practice? The case of the Samsø Renewable Energy Island. *Renewable and Sustainable Energy Reviews* **2017**, *71*, 884-897.
11. Sovacool, B.K. The intermittency of wind, solar, and renewable electricity generators: Technical barrier or rhetorical excuse? *Utilities Policy* **2009**, *17 (3-4),* 288-296.

12. Fridleifsson, I.B. Geothermal energy for the benefit of the people. *Renewable and sustainable energy reviews* **2001**, *5 (3)*, 299-312.
13. Murage, M.W.; Anderson, C. L. Contribution of pumped hydro storage to integration of wind power in Kenya: An optimal control approach. *Renewable Energy* **2014**, *63*, 698-707.
14. Jurasz, J.; Dąbek, P.B.; Kaźmierczak, B.; Kies, A.; Wdowikowski, M. Large scale complementary solar and wind energy sources coupled with pumped-storage hydroelectricity for Lower Silesia (Poland). *Energy* **2018**, *161*, 183-192.
15. Carlsson, J.A. Energy Technology Reference Indicator projections for 2010-2050. European Commission – Joint Research Centre. Institute for Energy and Transport. Luxembourg, 2014.
16. Pujades, E.; Willems, T.; Bodeux, S.; Orban, P.; Dassargues, A. Underground pumped storage hydroelectricity using abandoned works (deep mines or open pits) and the impact on groundwater. *Hydrogeology Jour-nal* **2016**, *24 (6)*, 1531-1546.
17. Menéndez, J.; Loredo, J.; Fernandez, J.M.; Galdo, M. Underground Pumped-Storage Hydro Power Plants with Mine Water in Abandoned Coal Mines. In Proceedings of the IMWA 13th International Congress, 2017, pp.6-13.
18. Lu, B.; Stocks, M.; Blakers, A.; Anderson, K. Geographic information system algorithms to locate prospective sites for pumped hydro energy storage. *Applied Energy* **2018**, *222*, 300-312.
19. Bunker, K., Hawley, K., &Morris, J. (2015) Renewable Micro grids: Profiles from Islands and remote com-munities across the globe. Rocky Mountain Institute, November 2015. Available online: http://www.rmi.org/islands_renewable_microgrids (accessed on 15 March 2019)..
20. Duić, N.; Carvalho, M.G. Increasing renewable energy sources in island energy supply: case study Porto Santo. *Renewable and Sustainable Energy Reviews* **2004**, *8 (4)*, 383-399.
21. Bueno, C.; Carta, J.A. Technical–economic analysis of wind-powered pumped hydro storage systems. Part II: model application to the island of El Hierro. *Solar energy* **2005**, *78 (3)*, 396-405.

22. Bueno, C.; Carta, J.A. Wind powered pumped hydro storage systems, a means of increasing the penetration of renewable energy in the Canary Islands. *Renewable and Sustainable Energy Reviews* **2006**, *10 (4)*, 312-340.
23. Caralis, G.; Zervos, A. Analysis of the combined use of wind and pumped storage systems in autonomous Greek islands. *IET Renewable Power Generation* **2007**, *1 (1)*, 49-60.
24. Caralis, G.; Rados, K.; Zervos, A. On the market of wind with hydro-pumped storage systems in autonomous Greek islands. *Renewable and Sustainable Energy Reviews* **2010**, *14 (8)*, 2221-2226.
25. Papaefthimiou, S.; Karamanou, E.; Papathanassiou, S.; Papadopoulos, M. Operating policies for
26. Wind-pumped storage hybrid power stations in island grids. *IET Renewable Power Generation* **2009**, *3 (3)*, 293-307.
27. Katsaprakakis, D.A.; Christakis, D.G.; Pavlopoylos, K.; Stamataki, S.; Dimitrelou, I.; Stefanakis, I.; Spanos, P. Introduction of a wind powered pumped storage system in the isolated insular power system of Kar-pathos–Kasos. *Applied Energy* **2012**, *97*, 38-48.
28. Kapsali, M.; Anagnostopoulos, J. S.; Kaldellis, J.K. Wind powered pumped-hydro storage systems for remote islands: a complete sensitivity analysis based on economic perspectives. *Applied energy* **2012**, *99*, 430-444.
29. Ma, T.; Yang, H.; Lu, L.; Peng, J. Technical feasibility study on a standalone hybrid solar-wind system with pumped hydro storage for a remote island in Hong Kong. *Renewable Energy* **2014**, *69*, 7-15.
30. Papaefthymiou, S.V.; Papathanassiou, S.A. Optimum sizing of wind-pumped-storage hybrid power stations in island systems. *Renewable energy* **2014**, *64*, 187-196.
31. Ma, T.; Yang, H.; Lu, L.; Peng, J. Optimal design of an autonomous solar–wind-pumped storage power sup-ply system. *Applied Energy* **2015**, *160*, 728-736.
32. Barreira, I.; Gueifão, C.; Jesus, J.F. (2017). Off-stream Pumped Storage Hydropower plant to increase re-newable energy penetration in Santiago Island, Cape Verde. In *Journal of Physics: Conference Series* (Vol. 813, No. 1, p.012011). IOP Publishing.
33. Tsamaslis, P.; Karagiorgis, G.; Katsanevakis, A. Hybridization of photovoltaics with pumped storage hydro-electricity. An approach to increase RES penetration and achieve grid

benefits. Application in the island of Cyprus. *Journal of Power Technologies* **2018**, *97 (4)*, 336-341.

34. Sinha, S.; Chandel, S.S. Review of software tools for hybrid renewable energy systems. *Renewable and Sus-tainable Energy Reviews* **2014**, *32*, 192-205.
35. Canales, F.A.; Beluco, A. Modeling pumped hydro storage with the micropower optimization model (HOMER). *Journal of renewable and sustainable energy* **2014**, 6 (4), 043131.
36. HOMER Energy Support. (2017). Simulating Geothermal Power. Available online: http://usersupport. homerenergy.com/customer/en/portal/articles/2188860-simulating-geothermal-power (accessed on 15 March 2019).
37. Meza, C.G.; Rodríguez, C.Z.; D'Aquino, C.A.; Amado, N.P.; Rodrigues, A.; Sauer, I.L. Toward a 100% renewa-ble island.: a case study of Ometepe's energy mix. *Renewable Energy* **2019**, *132*, 628-648.
38. HOMER Legacy (Version 2.68). Available online: http://www.homerenergy.com (accessed on 25 Septem-ber 2018).
39. Canales, F.A.; Beluco, A.; Mendes, C.A.B. A comparative study of a wind hydro hybrid system with water storage capacity: Conventional reservoir or pumped storage plant? *Journal of Energy Storage* **2015**, *4*, 96-105.
40. Lambert, T.; Gilman, P.; Lilienthal, P. Micropower system modeling with HOMER. In *Integration of alterna-tive sources of energy*; Farret, F.A., Simões, M.G., Eds.; Wiley Interscience, USA, 2006; pp.379-418.
41. Zoundi, Z. CO2 emissions, renewable energy and the Environmental Kuznets Curve, a panel cointegration approach. *Renewable and Sustainable Energy Reviews* **2017**, *72*, 1067-1075.
42. Electricity Map: Mapping the climate impact of electricity. Available online: https://www.electricitymap.org/ (accessed on 25 October 2018).
43. FUNIDES. (2016) *Informe final*: El sector de energíaeléctrica de Nicaragua.
44. https://goo.gl/maps/XEVVrMfKK632
45. Ranaboldo, M.; Domenech, B.; Reyes, G.A.; Ferrer-Martí, L.; Moreno, R. P.; García-Villoria, A. Off-grid com-munity electrification projects based on wind and solar energies: A case study in Nicaragua. *Solar Energy* **2015**, *117*, 268-281.

46. Sánchez, P. (November 21st, 2017). Comienza el funcionamiento de la planta Solaris de 12 MW enNicara-gua. *PV Magazine*. Available online: https://www.pv-magazine-latam.com (accessed on March 15, 2019).
47. Ong, S.; Campbell, C.; Denholm, P.; Margolis, R.; Heath, G. *Land-use requirements for solar power plants in the United States.* National Renewable Energy Laboratory (NREL), Report NREL/TP-6A20-56290, Golden, CO, USA, 2013.
48. Kapelanczyk, L.; Rose, W. I.; Jicha, B. An eruptive history of Maderas volcano using new 40 Ar/39 Ar ages and geochemical analyses. *Bulletin of Volcanology* **2012**, 74 (9), 2007-2021.
49. Global Modeling and Assimilation Office (GMAO). MERRA-2 tavg1_2d_slv_Nx: 2d,1-hourly, time-averaged, single-level, assimilation, single-level diagnostics V5.12.4, Greenbelt, MD, USA, Goddard earth sciences da-ta and information services center (GES DISC). Available online: https://doi.org/10.5067/VJAFPLI1CSIV
50. Asturias, J. *Desarrollo y situación actual del sector eólicoen América Central*. Organización Latino americana de Energía (OLADE), Quito, Ecuador, 2012.
51. SUZLON. (2012). *S88 - 2.1 MW technical overview*. Available online: www.suzlon.com (accessed on 15 March 2019).